Schlumberger

Fundamentals of Formation Testing

Schlumberger

Fundamentals of Formation Testing

Schlumberger
225 Schlumberger Drive
Sugar Land, Texas 77478

Produced by Schlumberger Marketing Communications.

© 2006 Schlumberger. All rights reserved.

No part of this book may be reproduced, stored in a retrieval system, or transcribed in any form or by any means, electronic or mechanical, including photocopying and recording, without the prior written permission of the publisher. While the information presented herein is believed to be accurate, it is provided as is without express or implied warranty.

06-FE-014

An asterisk (*) is used throughout this document to denote a mark of Schlumberger.

Contents

Foreword xi
Overview 1
- Introduction 1
- Well testing applications 1
  - Formation pressure measurement 1
  - Permeability and skin 1
  - Formation fluid characterization 2
  - Reservoir characterization 2
- Well testing methods 2
  - Openhole and cased hole, no completion 2
  - Wireline testing 2
  - Production or injection test with completion string in place 2
- Well testing objectives 5
  - Exploration and appraisal well tests 5
  - Development well tests 5
  - Production and injection well tests 6
  - Productivity well tests versus descriptive reservoir tests 6
  - Goals of well test interpretations 6
- Reservoir pressure 6
  - Steady-state radial flow in reservoirs 8
  - Transient flow 9

Dynamic Properties of Reservoir Rock 13
- Introduction 13
- Porosity 13
  - Sandstones 13
  - Carbonates 14
  - Diagenesis and secondary porosity 14
    - Natural fracturing 14
    - Dissolution of limestone by leaching 15
    - Dolomitization of limestone 15
  - Diagenesis and porosity degradation 15
- Permeability 15
  - Absolute permeability 15
  - Mobility 16
  - Effective permeabilities 17
- Surface tension and wettability 17
  - Surface tension 17
  - Wettability 18
- Capillary pressure and saturation profiles in the reservoir 19
  - Capillary pressure and capillary rise 19

Saturation profiles in reservoirs 20
Irreducible water saturation 21
Displacement capillary pressure and FWL 22
Drainage and imbibition 23
Capillary pressure and wettability 23
Quantifying relative permeabilities 24
References 26
Dynamic Properties of Produced Fluids 27
Components of hydrocarbons 27
Classification of reservoir fluids 28
Phase behavior of single-component systems 30
Phase behavior of multiple-component systems 30
Phase behavior of reservoir fluids 32
Nonvolatile oil 32
Volatile oil 33
Condensate gas 34
Wet gas 35
Dry gas 35
PVT properties 36
Data sources 36
Gas compressibility factor 36
EOS: Basics of understanding 36
Solution GOR and bubblepoint pressure 38
FVFs 38
Fluid densities 39
Viscosities 39
Compressibilities 39
Modeling fluid behavior and PVT properties 39
PVT correlations 40
References 40
Pressure Sensors Technology 41
Introduction 41
Mechanical pressure sensors 41
Capacitance pressure sensors 41
Strain pressure sensors 42
Bonded wire sensors 42
Thin film sensors 42
Sapphire sensor 42
Quartz pressure sensors 44
Hewlett-Packard design 44
Quartzdyne design 44
Crystal Quartz Gauge 45
Paroscientific design 46
Quartztronics design 46
Introduction to metrology of pressure transducers 47
Static parameters 47
Accuracy 47
Resolution 49
Stability 50
Sensitivity 50

Dynamic parameters ... 51
Transient response during temperature variation ... 51
Transient response during pressure variation ... 52
Dynamic response during pressure and temperature shock ... 52
Dynamic temperature correction on the pressure measurement ... 53
Calibration and evaluation tests ... 54
Well Testing Operations and Data Collection ... 55
Openhole wireline testing ... 55
Pressure profiling ... 55
Permeability anisotropy profiling ... 55
Miniproduction tests ... 55
Representative fluid sampling ... 56
Modular reservoir power cartridge ... 56
Modular reservoir hydraulics module ... 56
Modular reservoir probe single module ... 56
Modular reservoir sample chamber ... 60
Modular reservoir packer dual module ... 60
Flow-control module MRCF ... 62
Modular reservoir packer module ... 63
Modular reservoir pumpout module ... 64
Modular reservoir fluid analyzer module ... 64
Modular reservoir multisample module ... 66
Cased hole wireline testing ... 67
Drillstem testing ... 67
Purpose of a DST ... 67
Pressure-controlled tester valve ... 68
Intelligent Remote Implementation System ... 69
Universal Pressure Platform and UNIGAGE recorder ... 72
DataLatch recorder ... 74
DST sample chambers and carriers ... 77
Other DST string configurations ... 77
Simultaneous perforating and testing ... 78
TCP ... 78
MWP ... 78
Well tests for TCP and MWP operations ... 80
Well tests in production and injection wells ... 80
Control of wellbore effects while testing ... 81
Testing in pumping wells ... 82
Permanent pressure measurements ... 82
References ... 84
Test Design Considerations ... 85
Introduction ... 85
New wells: DST or wireline testing? ... 85
Production and injection wells ... 86
Workover wells ... 86
SRO versus downhole recording ... 87
Pressure gauge metrology ... 87
Fluid sampling options ... 88
Operational constraints ... 88
Interpretation requirements ... 89

Test schedule and simulation ... 89
Summary of test types ... 89
References ... 91
Reservoir Fluid Sampling ... 93
Introduction ... 93
Representativity of reservoir fluid samples ... 93
Conditions for representativity ... 93
Level of contamination ... 94
Well conditioning ... 94
The FPE service ... 94
Wellsite sample validation and properties estimation ... 94
Assessing bottomhole sample validity ... 95
FPE analysis on bottomhole samples ... 96
FPE analysis on separator samples ... 98
Fluid sampling methods ... 98
Wireline sampling ... 98
Sampling during a DST well test ... 99
Surface sampling ... 99
Production well sampling ... 99
DST and bottomhole sampling of oil reservoirs ... 100
Preliminary considerations ... 100
Sampling new wells and undepleted reservoirs ... 100
Sampling depleted reservoirs ... 100
Sampling high-volatility oil reservoirs ... 101
Sampling near-critical fluids ... 101
DST and bottomhole sampling of gas reservoirs ... 101
Preliminary considerations ... 101
Bottomhole versus surface sampling ... 102
Sampling procedures ... 102
Sampling new wells and undepleted reservoirs ... 102
Sampling depleted reservoirs ... 103
Surface sampling ... 103
Wireline tester flowline fluid resistivity and optical properties ... 103
Flowline resistivity ... 103
Optical density ... 105
Fluid coloration ... 107
Scattering ... 107
Gas detection ... 109
Holdup indicators ... 110
Wireline tester real-time fluid identification and contamination monitoring ... 111
Introduction and summary of methods ... 111
Oil-base filtrate contamination monitoring ... 111
Direct sample methane detection: the LFA tool ... 114
In-situ determination of PVT properties ... 116
Advanced wireline sampling techniques ... 118
Dual-packer fluid sampling ... 118
Pumpout module performance ... 118
Minimum permeability requirement ... 118
Pumpout time estimation ... 118
Flowline and pump volumes ... 119

Controlled drawdown sampling 120
Low-shock sampling 121
Charged-chamber sampling 122
Control of asphaltenes 123
Heavy oil sampling 123
Gas condensate sampling 123
Water sampling 123
Guard probe sampling and fluid flow modeling 124
References 124
Static Pressure Applications 125
Determination of static reservoir pressure 125
Wireline tester pretests 125
Supercharging 126
Static pressure from buildup tests 127
Reservoir pressure from limit tests 128
Drawdown mobility from wireline testers 128
Drawdown mobility 128
Radius of investigation for drawdown 129
Drawdown permeability 129
Buildup mobility 130
Pressure-depth plots 131
Reservoir fluid density from gradients 131
Virgin reservoirs 133
Developed reservoirs 135
Pressure probes in tandem or triplex 136
Pressure profiles in horizontal wells 141
Effect of capillary pressure 143
Applications of static pressure 148
Depth datum of pressure 148
Reservoir pressure in producing fields 148
IPR, PI and AOF potential 149
Selective Inflow Performance 150
References 151
Transient Testing Interpretation Principles 153
Interpretation methodology 153
IARF 153
Line source solution to the diffusivity equation 154
Wellbore storage and skin effects 155
Wellbore storage effect 155
Skin effect 155
Combined WBS and skin effects 156
Log-log plots and type-curve analysis 157
Semilog approach 157
Log-log approach 157
Pressure derivative 158
Attributes of the log-log plot 158
Type-curve matching 159
Succession of events detected during a well test 160
Interpretation of drawdown tests 162
Validity of interpretation 162

Miller, Dyes, Hutchinson plot and analysis 162
Interpretation of buildup tests 163
Drawdown versus buildup 163
Horner plot and analysis 163
Multirate superposition plot and analysis 164
Changing WBS 164
Convolution and deconvolution 166
The convolution integral 166
Rate normalization 168
Deconvolution of afterflow rates 171
Boundary conditions and reservoir flow models 171
Inner boundary conditions 171
Fractured well 171
Partially completed well 172
Horizontal well 172
Reservoir flow models 172
Dual-porosity reservoir 172
Double-permeability reservoir 173
Composite reservoir 173
Outer boundary conditions 173
No-flow boundaries 173
Constant pressure boundaries 173
Mixed boundaries 174
Numerical simulation of boundary conditions 174
Specialized plots 174
Interpretation of gas well tests 175
Pseudopressure and pseudotime 175
Pseudoskin 175
References 176
Advanced Applications of Transient Testing 177
Buildup mobilities from wireline testers 177
Spherical and radial derivatives 177
Buildup mobilities 177
Radius of investigation of buildup 180
Multiple well tests 180
Horizontal interference tests 180
Pulse tests 182
Conventional vertical interference tests 184
Anisotropic permeability determination using wireline testers 186
Probe configurations 186
Rate of flow through the sink probe: “superflow” 186
Flow regime identification 188
Estimation of mobilities and storativity 188
Model verification 192
Sensitivity analysis 192
Influence of invasion 195
MPTs with wireline packer testers 197
IPTTs with wireline packer testers 199
Multilayer tests 203
Conventional testing approach 203

LRT overview 205
Interpretation of the LRT 206
Complexity of the interpretation 206
Model identification and initial estimates 207
History match 207
LRT example 207
Horizontal well tests 211
Flow regimes 211
Interpretation 211
Use of simultaneous pressure and flow measurements 212
Example 1 212
Example 2 214
Tests in naturally fractured reservoirs 215
Conventional tests 215
Openhole wireline tests 216
Multipoint gas well tests 219
Multipoint well testing 219
Flow-after-flow tests 219
Isochronal tests 219
Modified isochronal tests 219
Interpretation 222
Impulse tests 223
Impulse testing theory 223
Surface flow impulse tests 223
Closed chamber impulse tests 225
Slug tests 226
Other specialized tests 227
Reservoir limit tests 227
Injection well tests 231
Rod-pumping well tests 232
References 234
Testing Interpretation Software 237
Introduction 237
Conventional well test interpretation software 237
Data loading and editing facilities 237
Quality-control facilities 238
Fluids and PVT module 238
Basic interpretation functions 238
Test design module 239
Advanced interpretation functions 240
Changing well 240
Average reservoir pressure 240
Modeling of the variable downhole flow rate during drawdown periods 240
Multilayer testing 240
Inflow performance analysis 241
Interpretation of multipoint gas well tests 241
Modeling of multiple wells 241
Artificial intelligence and advanced regression 241
Interaction with a well flow model 242
Wireline test interpretation software 242

Software used by Schlumberger 242
Other Applications 243
Rock stress determination 243
Introduction 243
Operating technique 243
Filtration test 244
Fracturing and shut-in decline 244
Reopening test 244
Flowback/pressure rebound test 245
Limitations 245
Example 246
Combined answers from wireline testers and NMR logs 247
Estimating the capillary pressure 247
Correlating with MDT permeability 249
Identifying reservoir fluids 250
Selecting sampling depths 251
References 252
Symbols 253
Roman symbols 253
Greek symbols 256
Marks 259
Nomenclature 261
Unit Abbreviations 263

Foreword

Cost-effective formation testing is a vital part of modern oil and gas operations. As production companies pursue reserves in high-cost, high-risk environments, formation testing plays an increasingly prominent role in decision making. Complete understanding of reservoir properties and fluids is crucial from the first exploratory well to wells drilled for enhanced recovery in any field.

Fundamentals of Formation Testing is the first of a series of Schlumberger reference books produced for current and future oilfield technical professionals. This document illustrates state-of-the-art technologies with field examples from well testing applications to test design, sampling techniques, operations, and interpretation. We trust this information will reinforce the value of formation testing.

Sami Iskander
President, Wireline
Clamart, France
March 2006

Overview

Introduction

The general formation evaluation workflow consists of delineating the reservoir using seismic information and well-to-well correlations, evaluating the volume of reserves, and then determining the fluids present and the ability to produce them. Logs provide initial information on the fluid type and producibility. Testing provides confirmation, detailed fluid properties, accurate pressure measurements and production evaluation. Formation testing is the final evaluation step before the well is put into production and provides essential information to design the well completion and production facilities.

Two different technologies can be used for testing:

- Wireline formation testing uses a sonde that can be positioned at a selected depth in the formation to provide accurate measurements of pressure and fluid type but limited production data.
- Well testing uses a packer lowered on drillpipe or tubing. The tested interval is not precisely defined and downhole measurements are limited, but the volume of fluid produced enables complete evaluation of production potential.

This book will describe the advantages and limitations of both formation testing techniques and how they complement each other.

Well testing applications

There are many applications of well testing, but they are grouped into four fundamental classes.

Formation pressure measurement

This class of application uses the direct static formation pressure measurement. It includes

- static pressure measurement and depletion determination
- determination of the inflow performance and productivity index (PI) of the reservoir and, in gas wells, the absolute open flow (AOF) potential of the reservoir
- determination of reservoir fluid density from gradients
- determination of reservoir fluid contacts
- identification of reservoir vertical permeability barriers
- identification of vertical flow through layered sequences in developed reservoirs
- numerical reservoir simulation applications.

Permeability and skin

The pressure and associated measurements (e.g., downhole flow) are interpreted to yield reservoir dynamic parameters relevant to fluid flow, such as formation permeability, and any occurrence of skin (e.g., formation damage) that would impair the flow. The measurements will help determine

- reservoir permeability
- well deliverability
- a damaged or stimulated well condition
- vertical rock permeability
- the efficiency of stimulation treatments.

Formation fluid characterization

The essence of formation testing is flowing the well, which presents the unique opportunity to recover samples of the reservoir fluid. It enables

- collecting representative reservoir samples
- characterizing the fluid composition, its phase behavior and its pressure-volume-temperature (PVT) properties.

Reservoir characterization

The pressure response during a well test provides the characteristic signature of reservoir fluid flow events that will be interpreted in terms of boundaries, heterogeneities and reservoir volume. It enables

- determining the total reservoir pore volume connected to the tested well
- determining the average reservoir pressure
- determining reservoir boundary conditions such as impermeable barriers and constant pressure conditions
- characterizing reservoir heterogeneities such as layered systems and natural fractures
- quantifying vertical and horizontal reservoir communications.

Well testing methods

The three primary ways to test a well are covered in the following sections.

Openhole and cased hole, no completion

Conventional deliverability tests, involving extensive surface and downhole equipment, are designed to simulate the production characteristics of new wells. Figure 1 shows a typical surface offshore layout for an exploration well test and a sketch of the drillstem test (DST) string of downhole testing tools.

Wireline testing

Wireline tests are performed mostly in open hole using a cable-operated formation tester and sampling tool anchored at depth while reservoir communication is established through one or more pressure and sampling probes. Figure 2 shows typical configurations for testing and sampling with the MDT* Modular Formation Dynamics Tester tool.

Production or injection test with completion string in place

Production and injection well tests, performed using production logging tools, are conducted to obtain pressure and optional flow measurements. Figure 3 shows a sketch of a basic version of the PS Platform* new-generation production services platform, equipped with a gas holdup sensor.

During a well test, a particular flow rate schedule is applied to the targeted reservoir, using surface or downhole flow control equipment (in the case of conventional testing and production or injection well testing) or a software-selected drawdown routine (in the case of wireline formation testing). The resulting pressure changes and the flow rates (surface and optionally downhole) are recorded versus time, typically either in the same well or probe, or in a nearby well or probe during interference tests. From the measured pressure response, and from predictions of how reservoir properties influence this response, one can infer the values of these properties, which include permeability, skin factor and other parameters. A particular aspect of well testing is formation fluid sampling, which is one of the main reasons wells are tested.

Well tests are quite varied in nature. Unlike logging runs, which consist of recordings of static formation properties such as density and resistivity, well tests must be designed before they are executed. Effective well testing must obey the design-execute-evaluate cycle, where the operations are first designed to target the measurement of specific parameters, then executed in the field, then evaluated—the evaluation expectedly yielding the values of the targeted parameters. If the objectives are not met, the evaluation feeds back into the design of future tests—sometimes also into the design of the test being performed—and the process continues through the design-execute-evaluate cycle to optimize the results versus the expectations.

Because well tests can be designed to achieve many objectives under highly varied environmental and reservoir conditions, implementation in the field can be performed in a number of ways, using many different hardware configurations and an extensive suite of interpretation methods.

This chapter will discuss the objectives of well testing (including the hardware and the measurement sensors used), testing data acquisition, interpretation, applications and software. A separate chapter will discuss formation fluid sampling.

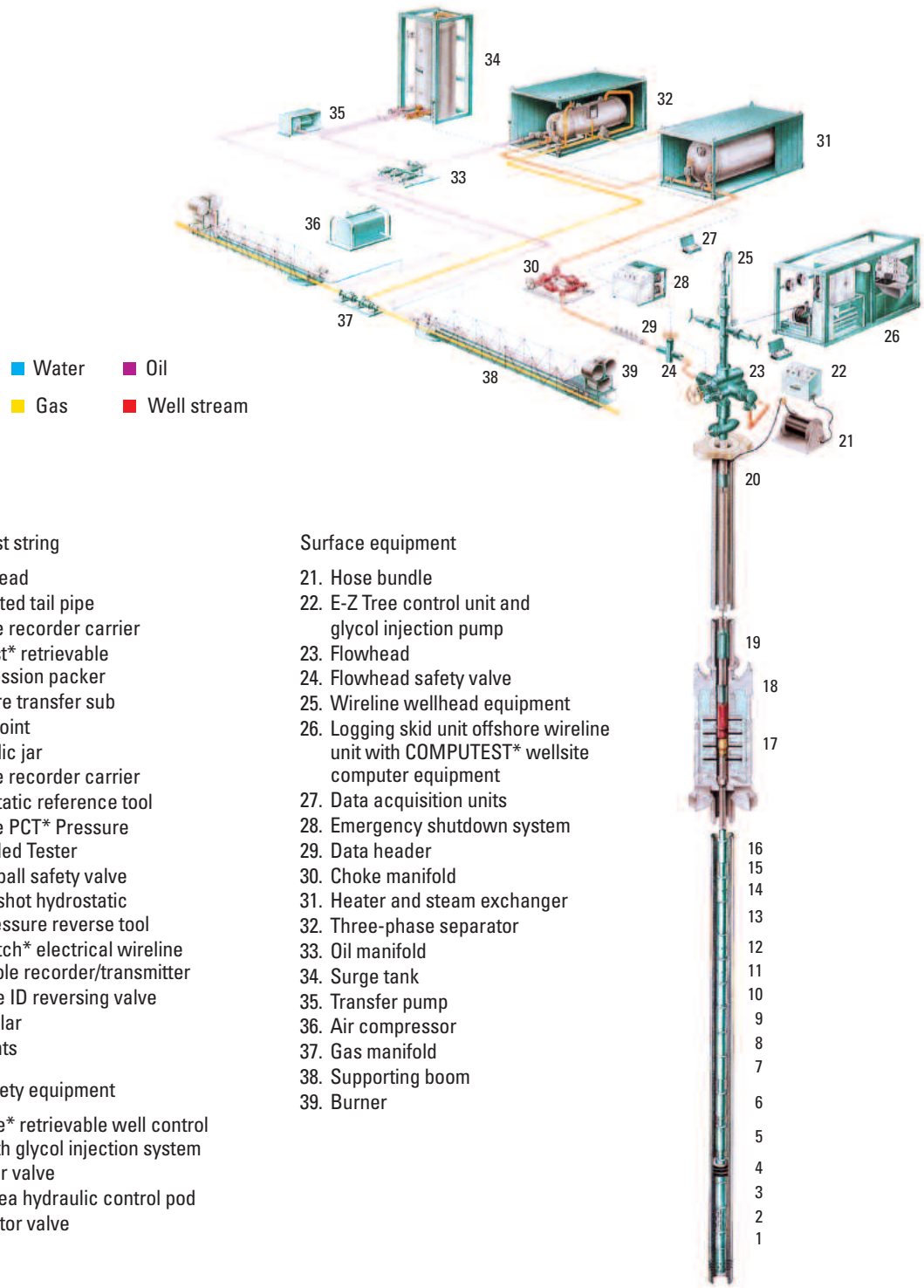

Fullbore test string

1. Firing head
2. Perforated tail pipe
3. Fullbore recorder carrier
4. PosiTest* retrievable compression packer
5. Pressure transfer sub
6. Safety joint
7. Hydraulic jar
8. Fullbore recorder carrier
9. Hydrostatic reference tool
10. Fullbore PCT* Pressure Controlled Tester
11. Single-ball safety valve
12. Single-shot hydrostatic overpressure reverse tool
13. DataLatch* electrical wireline downhole recorder/transmitter
14. Multiple ID reversing valve
15. Drill collar
16. Slip joints

Subsea safety equipment

17. E-Z Tree* retrievable well control tree with glycol injection system
18. Retainer valve
19. Deep-sea hydraulic control pod
20. Lubricator valve

Surface equipment

21. Hose bundle
22. E-Z Tree control unit and glycol injection pump
23. Flowhead
24. Flowhead safety valve
25. Wireline wellhead equipment
26. Logging skid unit offshore wireline unit with COMPUTEST* wellsite computer equipment
27. Data acquisition units
28. Emergency shutdown system
29. Data header
30. Choke manifold
31. Heater and steam exchanger
32. Three-phase separator
33. Oil manifold
34. Surge tank
35. Transfer pump
36. Air compressor
37. Gas manifold
38. Supporting boom
39. Burner

*Mark of Schlumberger

Figure 1. Typical offshore layout for an exploration well test.

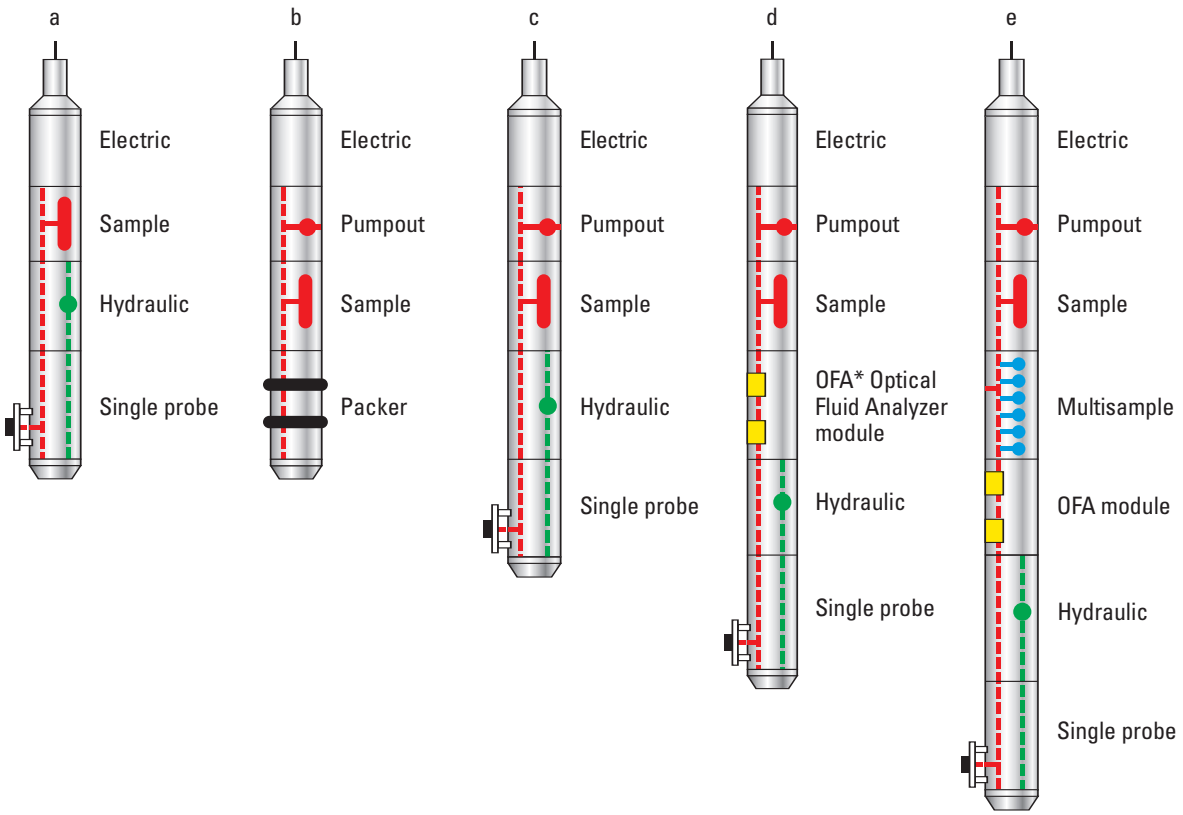

Figure 2. Typical MDT configurations for formation testing and sampling.

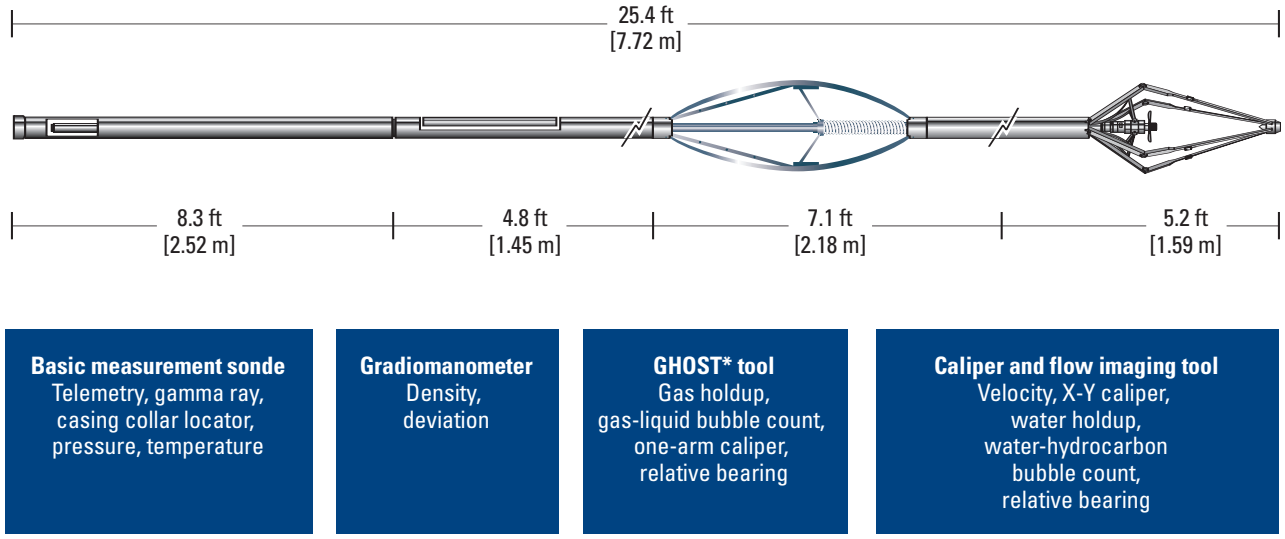

Figure 3. Sketch of a basic PS Platform tool for production logging and testing in production and injection wells.

Well testing objectives

Well tests are conducted at all stages in the life of a reservoir: exploration, development, production and injection. At each of these stages, tests are performed with set objectives, using specific hardware and design options.

Exploration and appraisal well tests

At the exploration stage, tests are performed both with an openhole wireline tester, to measure pressures and collect fluid samples, and with the drillstring, to simulate production at the time of the completion.

A wireline tester is used to measure the static pressures of all the permeable layers of interest. Pressure versus depth plots help establish the formation fluid gradients and identify the fluid contacts in the reservoir. The MDT tool can also be used with a packer module to perform a smaller-scale production test.

A conventional DST is necessary because at the exploration stage the operator needs to know whether the discovery is of commercial value. The objectives are to establish a production rate and the volume of the reservoir. If production rates are low, the operator needs to know if it is because of poor reservoir deliverability or because of a high skin factor. In the latter case, flow rates could be increased if the skin were removed, and the well would have better potential. If the volume of hydrocarbons in place, inferred from the initial test, was too small, the discovery would lose its economic potential even if production rates were high.

A primary reason for testing exploration wells is to recover a fluid sample. This is the best stage at which to characterize the reservoir fluid, because the reservoir is in a virgin state and no fluid has been produced. In later stages of a reservoir's life, the fluid composition changes and the surface fluid composition may not exactly match the downhole fluid composition. (This is especially true in two-phase situations such as condensate reservoirs.) Because the fluid sampling program in an exploration well is particularly important, it will feature both a wireline sampling program (including the collection of PVT-quality samples) and larger volumes produced during the DST operation.

Development well tests

During the development phase, the test objectives are different from those of the exploration and appraisal stages. Presumably the reservoir deliverability has been assessed and the reservoir fluid has been characterized. The operator now needs to better understand the hydraulic communications in order to relate the reservoir characterization to the geological model.

Formation testing at this stage predominantly consists of openhole wireline pressure testing. The emphasis is on static reservoir pressures, which are used to confirm fluid contacts and fluid density gradients. On that basis, the different hydraulic compartments of the reservoir will be determined and tied into the geological model. Often, field production has already started while additional development wells are being drilled. In the new wells, pressure gradients already may reflect the influence of the production on the reservoir pressure. On those wells, the reservoir simulator, if in place, will be used to predict vertical pressure profiles to be confirmed by the wireline tester measurements. Any differences would be used to refine the geological model and introduce suitable compartments in the dynamic model. This stage is crucial in reservoirs with a large number of stacked layers such as deltaic deposits (which are the most prolific hydrocarbon-producing reservoirs). For these, wireline pressure measurements are an invaluable aid to reservoir dynamics characterization, because there is no other practical way of assessing vertical and lateral communications and the volumetrics of these small individual accumulations. This application contributed to the immediate acceptance of the first wireline testing tool, the RFT* Repeat Formation Tester. Until this tool's introduction in the mid-1970s, distributed pressure measurements had been unavailable to reservoir engineers.

The main objective of conventional testing, if performed on the new development wells, is to measure any skin resulting from formation damage. If skin is absent, the wells can produce at their full potential. If a high skin is detected, it must be corrected before putting the wells on line.

Another reason for testing development wells is to prepare them for stimulation operations, which may be necessary to produce them economically. This is common with many reservoirs in low-producibility areas, where the operator needs an early return on investments. When unstimulated production rates would be uneconomical, the operator often spends as much as $1 million or more on extensive stimulation operations, such as hydraulic fracturing. Recovering this investment could take months. Conventional well testing is especially important to assess the productivity gains achieved through measuring skin, determining fracture length and its hydraulic conductivity, and assessing the financial risks.

Production and injection well tests

In the production phase, the objectives of testing shift from flow evaluation to reservoir monitoring, data collection for history matching of reservoir simulators, and productivity tests to assess the need for stimulation. Well tests are performed to check for skin resulting from migration of fines to the near-wellbore region, and to assess the need for acidizing to remove those fines. Partial completion effects are diagnosed and remedied by reperforating or by extending perforation intervals. Gravel-packed wells are tested to evaluate the gravel-pack skin (which is often very large) and decide on any subsequent treatment.

Most of these tests are performed using a pressure gauge suspended from an electric cable or a slickline, or using a production logging tool that will provide complementary measurements such as downhole flow rate. The complexity of tests will depend on the well and may vary from a simple buildup test to a series of step-rate tests intended to analyze the dynamic performance of complete multilayer systems.

Cased hole wireline testing also may be performed to obtain formation pressures in layered sequences, collect samples of bypassed oil detected by saturation measurements and, in some cases, measure permeability.

Productivity well tests versus descriptive reservoir tests

The interpretation of well tests is one of the most widespread sources of dynamic reservoir data. Tests on oil and gas wells are performed at various stages of drilling, completion and production. The test objectives range from simple measurements of reservoir pressure to characterization of complex reservoir features. Well tests can be classified either as single-well productivity tests or descriptive reservoir tests.

- Single-well productivity tests are conducted to
  - determine well deliverability
  - characterize formation damage and other sources of skin
  - identify produced fluids and determine their respective volume ratios
  - measure reservoir pressure and temperature
  - obtain representative fluid samples suitable for PVT analysis
  - evaluate completion efficiency
  - evaluate workover or stimulation treatments.
- Descriptive reservoir tests are conducted to
  - assess reservoir extent and geometry
  - determine hydraulic communication between wells
  - characterize reservoir heterogeneities
  - evaluate reservoir parameters.

Goals of well test interpretations

Table 1 lists the interpretation objectives of typical well tests. Five types of tests have been considered:

- openhole wireline test on an exploration or appraisal well
- conventional DST on an exploration or appraisal well
- openhole wireline test on a development well
- conventional DST on a development well
- cased hole test on a production or injection well, using a pressure gauge or a production logging tool.

Reservoir pressure

The primary data obtained from reservoir testing are continuous measurements of reservoir pressure versus time; flow rate is typically controlled to follow a planned schedule. In effect, formation pressure is probably the single most important measurement in the production history, dynamics and economics of the field. Pressure measurements are used in volumetric calculations (reserves), dynamic reservoir property determinations (permeability), reservoir characterization (compartmentalization), fluid characterization (phase behavior, fluid properties) and well completion design (lifting systems). Pressure also provides information on the evolution of reservoir energy and fluid contacts with time, and it is an essential input to reservoir simulation models. Further, repeated and comprehensive use of pressure measurements is fundamental to the success of production optimization programs. Such programs address not only the well itself but the whole reservoir and even the surface facilities.

In addition to well testing applications, reservoir pressure testing is used in

- determining rock stresses and hydraulic fracturing characteristics
- optimizing well flow characteristics and control of hydraulic losses
- optimizing surface production systems
- determining material balance
- characterizing reservoir energy.

Table 1. Target Objectives of the Interpretation of Various Types of Well Tests

	Exploration or Appraisal Well Openhole Wireline	Exploration or Appraisal Well DST	Development Well Openhole Wireline	Development Well DST	Production or Injection Well Cased Hole Wireline (Gauges or Production Logging tool)
Pressure-depth profile	Yes		Yes		
Vertical permeability barriers	Yes		Yes		
Reservoir fluid densities from gradients	Yes		Not if differential depletion		
Reservoir fluid contacts	Yes		Not if differential depletion		
Vertical flow patterns from pressure profile	Yes		Yes		
Drawdown and buildup mobilities	Yes		Yes		
Anisotropic permeability determination	Yes		Yes		
Fluid samples	Yes	Yes	Yes	Yes	Yes
Representative fluid samples	Yes	Little control on quality	Needs initial reservoir fluid	Needs initial reservoir fluid	Needs initial reservoir fluid
Reservoir deliverability kh/μ		Yes		Yes	
Skin factor		Yes		Yes	Yes
Reservoir heterogeneities and flow model		Yes		Yes	Yes
Reservoir volume		Yes			
Reservoir boundaries		Yes		Yes	Yes
Horizontal wells		Usually no exploration horizontal wells		Yes	Yes
Horizontal interference tests			Yes	Yes	Yes
Vertical interference tests			Yes		Yes
Average reservoir pressure			Yes	Yes	Yes
Treatment efficiency					Yes
Layered reservoirs testing					Yes
Determination of PI and AOF					Yes
Multipoint gas well tests					Yes
Injection well tests					Yes
Flow measurements		Possible but infrequent	Yes	Recommended	

The measurement commonly known as "reservoir pressure" is a measurement of the pore fluid pressure p_p in a porous reservoir. The reservoir pore fluid pressure is the fraction of the overburden pressure that is supported by the fluid system. The other fraction, the effective stress σ_v' is supported by the rock. The overburden stress (σ_v) is caused by the weight of the fluid and rocks in the lithostatic column above the measured point. Pore pressure is linked to rock stresses with the relation

$$\sigma_v = \sigma_v' + p_p. \tag{1}$$

The static pressure measurement always results from some form of transient test, where a specific volume of fluid is withdrawn from the well before the pressures are allowed to stabilize. The efficiency of wireline testing, where static pressures can be acquired at the rate of possibly one measurement every few minutes, results from the small volume of the fluid sample. Conversely, in conventional well testing, static pressures take much longer to stabilize only because of the larger amount of fluid withdrawn, which creates pressure disturbances observable at much greater distances into the reservoir. The term "sandface pressure" refers to the value of the pressure existing at the boundary between the reservoir and the wellbore, whether the reservoir flows (drawdown or flow tests) or not (shut-in or buildup tests). Ideally the sandface pressure would be the pressure measured by a wireline tester (considering the probe penetration to be nil) or the well pressure—static or flowing—measured at depth in the well by a hanging pressure gauge.

To illustrate the relationship between the reservoir pressure and the reservoir dynamic properties, this book will review the essentials of steady-state (or stabilized) flow in reservoirs and the propagation of pressure in reservoirs under the effect of transient flow conditions.

Steady-state radial flow in reservoirs

Flow through a homogeneous reservoir into a wellbore is considered radial when the flowlines are horizontal, parallel and converge toward the wellbore axis. Infinite-acting radial flow (IARF) is a special case of transient flow regime illustrated in Fig. 4. In IARF, an idealized cylindrical model can be used to calculate flow rates and describe the pressure distribution away from the wellbore.

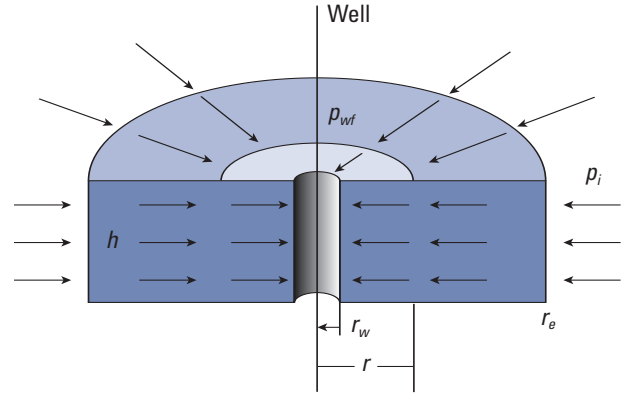

Figure 4. Infinite-acting radial flow.

If h is the thickness of the flowing interval, the cross-sectional area of flow at distance r from the axis of the wellbore is $2\pi rh$, and the flow velocity v through this area for a production rate Q is

$$v = \frac{Q}{2\pi rh}. \tag{2}$$

Darcy's steady-state equation can be written to express the flow velocity

$$v = \frac{k}{\mu}\frac{dp}{dr}, \tag{3}$$

where k is the reservoir permeability and μ is the reservoir fluid viscosity.

Combining Eq. 2 and Eq. 3, we get

$$v = \frac{Q\mu}{2\pi kh}\frac{dr}{r}. \tag{4}$$

Eq. 4 can be integrated in two different ways:

- From $r = r_w$ (r_w is the wellbore radius, where the pressure is the sandface pressure, p_{wf}) to $r = r_e$ (r_e is the external or drainage radius, where the pressure is the static pressure, p_i), giving the steady-state flow rate:

$$Q = \frac{2\pi kh\left(p_i - p_{wf}\right)}{\mu \ln\left(\frac{r_e}{r_w}\right)}. \tag{5}$$

In oilfield units,

$$Q = \frac{7.08kh\left(p_i - p_{wf}\right)}{\mu \ln\left(\frac{r_e}{r_w}\right)}. \tag{6}$$

- From r to r_e, giving the pressure response at distance r:

$$p_{(r)} = p_i - \left(p_i - p_{wf}\right)\frac{\ln\left(\frac{r_e}{r}\right)}{\ln\left(\frac{r_e}{r_w}\right)}. \tag{7}$$

The distribution of pressure versus distance from the wellbore is shown on Fig. 5. The greatest pressure loss occurs within a short distance (in this example, about 100 ft). The pressure distribution is independent of reservoir permeability. As pressure varies with the logarithm of radius, the pressure measured at the sandface is little affected by the drainage radius in normal production conditions. On the other hand, because r_w (which in practice is taken as the casing outside diameter) can vary considerably, this parameter has a larger influence on both the pressure distribution and the flow rates.

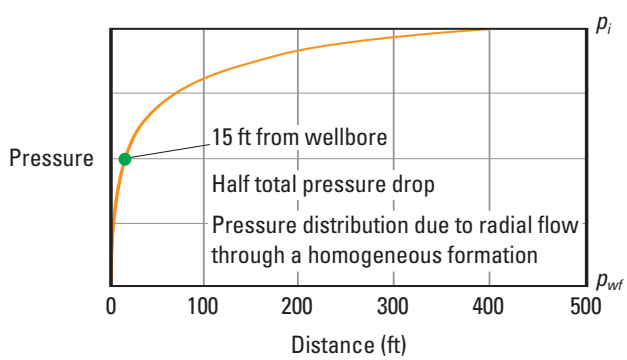

Figure 5. Pressure profile in radial flow regime.

This pressure profile applies only to laminar flow and slightly compressible (e.g., liquid) flows. At very high rates, and for compressible fluids (e.g., gas), flow near the wellbore may become turbulent and pressure gradients may become steeper than predicted by Fig. 5.

In practice, the presence of skin often affects the pressure profile away from the wellbore. Skin is a condition of flow impairment or enhancement close to the wellbore (the "skin") created by various conditions such as formation damage (or stimulation). Skin effect is the equivalent of a pressure drop added to (or subtracted from) the sandface pressure that would exist in the absence of skin. The pressure profile away from the wellbore will be affected by the existence or absence of skin, as illustrated in Fig. 6.

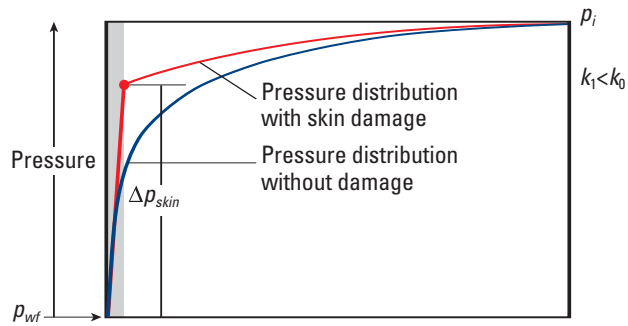

Figure 6. Comparison of pressure profiles with and without skin damage.

Transient flow

A step change in the production rate of a well causes a pressure disturbance that propagates radially outward into the reservoir at a velocity determined by the hydraulic diffusivity of the total reservoir and fluid system:

$$\frac{k}{\phi \mu C_t}, \tag{8}$$

where ϕ is the reservoir porosity and C_t is the compressibility of the total reservoir and fluid system. The velocity of propagation is independent of the magnitude of the change causing the disturbance. This is analogous to the observation that the velocity of ripples caused by throwing a pebble into a pond is independent of the size of the pebble.

There are two basic types of pressure transient tests:

- Pressure drawdown tests are performed after the well has been shut in for a period sufficient to establish static pressure conditions. The well is opened and produced at a steady flow while the pressure (and optionally the rate) change is observed at the sandface.
- Pressure buildup tests are performed after the well has flowed for a period sufficient to establish a radial flow regime. The well is closed while the pressure (and optionally the rate) change is observed at the sandface.

The "open" (or "flow") and "close" (or "shut-in") cycles can be generated at the surface by changing the choke or closing the master valve, or downhole by using a downhole shut-in valve or a wireline tester flow control schedule.

Classic transient test analysis is based on solutions to the partial differential equations describing fluid flow through porous media in the period during which the flow around the wellbore is radial and has not encountered any distant reservoir heterogeneities or boundaries.

The radial diffusivity equation attempts to model the radial propagation of pressure through a reservoir of specified characteristics (permeability, porosity, compressibility), where a fluid of specified properties (density, viscosity, compressibility) is flowing. In the diffusivity equation, time is also a variable, which allows pressure modeling to be made both as a function of time and of distance from an observation point (typically the well).

The radial diffusivity equation results from a combination of three formulas:

- Darcy's law, presented in Eq. 3.
- The mass conservation equation:

$$\frac{d(\phi\rho)}{dt} = \frac{1}{r}\frac{d(\rho r v)}{dr}, \tag{9}$$

where ρ is the density of the flowing fluid and t is the running time.

- The equation-of-state of a slightly compressible fluid:

$$C_t = \frac{1}{\rho}\frac{d\rho}{dp}. \tag{10}$$

By making certain assumptions, the system shown in Eqs. 3, 9 and 10 simplifies, and the diffusivity equation can then be expressed in its most common form and applied to transient pressure testing.

$$\frac{d^2 p}{dr^2} + \frac{1}{r}\frac{dp}{dr} = \frac{\phi\mu C_t}{k}\frac{dp}{dt}. \tag{11}$$

The assumptions governing the validity of the radial diffusivity equation are as follows:

- Isothermal conditions exist.
- There are negligible gravitational effects.
- The flowing fluid is single phase.
- The reservoir is homogeneous, isotropic, incompressible and of constant porosity.
- The permeability is independent of pressure.
- The fluid viscosity is constant and independent of pressure.
- The pressure gradients are small.
- The fluid is slightly compressible.
- The flow is laminar (the velocity has no component normal to the flow).

Whether the final assumption is satisfied depends on the Reynolds number for reservoir flow. The Reynolds number, N_{Re}, (Eq. 12) is a dimensionless function of fluid velocity v, fluid density ρ, fluid viscosity μ and cross-sectional diameter of flow d stated in oilfield units as

$$N_{\mathrm{Re}} = 7742\frac{dv\rho}{\mu}. \tag{12}$$

At values of the Reynolds number less than 2000, the flow is laminar. This is the most common situation in practice. In some very high-rate oil wells, however, and in many gas wells (where fluid viscosity is low), the Reynolds number surpasses the 2000 to 3000 transitional range, and the flow becomes turbulent. The diffusivity equation can still be used in those situations, provided pseudofunctions of pressure and time are considered to account for the turbulence of the flow.

The radial diffusivity equation can be solved in many ways. One of the most useful results applies to transient radial flow, where flowlines are horizontal, perpendicular to the wellbore and convergent to it. In this case, the radial diffusivity equation is approximated to

$$p_D = \frac{1}{2}\left[\ln\left(\frac{t_D}{r_D^{\,2}}\right) + 0.80907\right], \tag{13}$$

where r_D, t_D and p_D are dimensionless variables related to the corresponding physical parameters r, t and p by

$$r_D = \frac{r}{r_w}, \tag{14}$$

$$t_D = \Delta t\frac{k}{\phi\mu C_t r_w^{\,2}}, \tag{15}$$

and

$$p_D = \Delta p\frac{2\pi kh}{Q\mu}. \tag{16}$$

Δt and Δp are the elapsed time and pressure change, respectively, referenced to the end of the previous shut-in or flowing period.

The formulation of p_D enables us to calculate the pressure value following an initial disturbance (the drawdown) at any point in space and time near the origin of the disturbance (i.e., the well).

An interesting result is that, at any specific time, the pressure disturbance is inversely proportional to $\ln(r_D^2)$. Thus, the magnitude of the disturbance is at a maximum near its origin (the wellbore) and rapidly diminishes away from the wellbore. Lower-permeability reservoirs would generate lower diffusivity and transmit pressure disturbances more slowly. Also, because the expression of p_D includes the reservoir deliverability kh/μ, the higher the reservoir deliverability, the smaller the pressure differentials and vice versa. This explains why it is difficult to measure significant pressure differentials in high-deliverability reservoirs, where high-resolution pressure gauges must be used.

Another meaningful result concerns the radius of influence of a pressure disturbance as a function of time. It is intuitive that the longer the well test, the deeper is the region investigated. The derivation of the dimensionless pressure p_D shows that the radius of influence of a pressure disturbance is proportional to the square root of time (in oilfield units):

$$r_i = \left(\frac{kt}{948\phi\mu C_t} \right)^{0.5} . \qquad (17)$$

This theory is shown schematically in Fig. 7, which explains why testing wells to observe distant reservoir boundaries rapidly becomes prohibitively expensive because of the time involved.

The following chapters describe the measurement technologies and the interpretation techniques of formation testing.

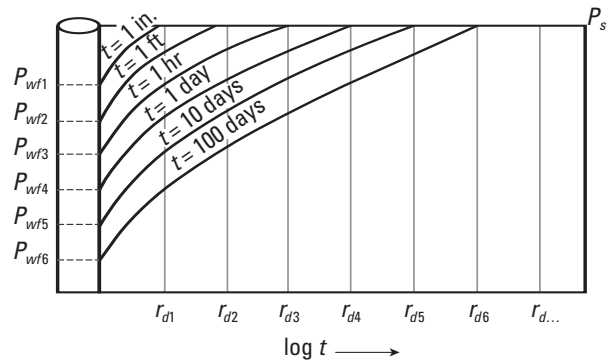

Figure 7. Propagation of a pressure disturbance as a function of time.