CAMERON

SUBMITTAL DATA SHEETS
Gate Valves

VALVES

Series DM FOR GENERAL SERVICE

Application Instructions	G-1A	07-09-01
Class 400-1500 (Except 4"-1500) Installation & Maintenance	G-2	06-12-87
Class 400 & 600 1-1/2" FP - 2" FP	G-4	09-08-05
Class 400 & 600 2-1/2" FP, 3" FP - 8" RP	G-9	09-08-05
Class 400 4-1/16" FP	G-14	09-08-05
Class 900 2"-6" FP, Class 1500 2"-3" FP	G-63	09-08-05
Class 1500 4" FP	G-65	09-08-05
Installation & Maintenance		
2000, 3000 & 5000 WP, 2" FP & 2-1/2" RP	G-5	03-09-01
2000, 3000 WP, 2-1/2", 3" & 4" FP	G-5A	03-09-01
2000, 3000 WP, 4" & 5" RP 5000 WP, 3" FP & 4" RP CLASS 1500, 4" FP 5000 WP, 4" FP, 5" & 6" RP	G-6	03-09-01
2000, 3000, & 5000 WP, 2" FP & 2-1/2" RP	G-11	09-08-05
2000 & 3000 WP 2-1/2" & 3" FP & 4" RP, 5000 WP 3" FP & 4" RP	G-21	09-08-05
2000, 3000 WP 4" FP & 5" RP	G-12	09-08-05
2000, 3000 WP 4-1/16" FP	G-15	09-08-05
5000 WP 4" FP - 6" RP (12-bolt)	G-22	09-08-05
5000 WP 5"x4" & 6"x4" RTJ (12-bolt)	G-22A	01-31-11
5000 WP 4" FP - 6" RP (4-bolt)	G-23	09-08-05
5000 WP 4” FP RTJ (4-bolt)	G-23A	01-27-11
5000 WP 2" FP For North Sea	G-31	08-13-04
5000 WP 3" FP For North Sea	G-32	06-29-05
5000 WP 4" FP, 5" RP For North Sea	G-33	10-24-06
3000 & 5000 WP 5" FP & 6" RP	G-34	09-08-05
1000 WP 5" FP	G-35	09-08-05
7500 WP 2"	G-38	09-06-11
7500 WP 2" XXH 1.50” Thru	G-38A	09-06-11
7500 WP 3"	G-39	09-06-11
7500 WP 4"	G-40	09-06-11
7500 WP 5"	G-41	09-06-11
Seat Installation Instructions	G-405	03-15-75

Series DM FOR NACE COMPLIANT SERVICE

7500 WP 2"	G-44	09-06-11
7500 WP 2" XXH 1.50” Thru	G-44A	09-06-11
7500 WP 3"	G-45	09-06-11
7500 WP 4"	G-46	09-06-11
7500 WP 5"	G-47	09-06-11

Series DB FOR GENERAL SERVICE

Application Instructions	G-1A	07-09-01
Installation & Maintenance		
Class 600 2", 2-1/2", 3", 4", 6"x4" & 6"; Class 900 2", 2-1/2", 3", 4", 6"x4"; Class 1500 2", 2-1/2", 3")	G-3	12-01-86
Class 1500 4"	G-7	03-09-01
Class 900 6"	G-8	03-09-01
Class 600 2", 2-1/2", 3", 4", 6"x4" & 6"	G-27	10-30-86
Class 900 2" - 6"x4"; Class 1500 2"-3"	G-28	12-01-86
Class 2500 2"	G-64	08-13-04
Class 1500 4", 6”x4”	G-29	07-09-01
Class 900 6", 8"x6"; Class 1500 6"	G-30	03-16-05

Series DT-S FOR GENERAL SERVICE
W-K-M Series DT-S Gate Valve Operations & Maintenance Instructions, API-6A 2000-3000-5000 2-1/16" & 2-9/16" sizes..G-10 07-09-01
W-K-M Series DT-S API 6A Gate Valves.....G-66 09-08-05

WATERFLOOD INJECTION EQUIPMENT
Flow Tee/Check Assemblies..... G-50 09-08-05
Flow Tees..... G-51 09-08-05
Ball Check Valves..... G-52 01-05-98
Strainers..... G-53 01-05-98
Wellhead Assemblies..... G-54 09-08-05

GATE VALVE STEM EXTENSIONS
Series DM - 2000, 3000 & 5000 WP & 4" Class 1500.....G-25 06-03-83
- Class 400-1500.....G-26 06-03-83

GATE VALVE ACTUATORS
Series DM Cylinder Actuators.....G-87 02-15-68
Electric Actuators.....G-89 06-15-73

SUPERSEDED SHEETS (Not Available for Distribution)
Series DT Gate Valves
Class 900 & 1500 2".....G-69 07-25-86
Class 900 & 1500 2" Teflon Seals/P-10 Seats.....G-69A 11-10-86
Class 900 & 1500 2-1/2".....G-68 07-25-86
Class 900 & 1500 2-1/2" Teflon Seals/P-10 Seats.....G-68A 11-10-86

OBSOLETE SHEETS (Not Available for Distribution)
7500 WP 5" RP.....G-36 06-25-96
7500 WP 4" FP.....G-37 06-25-96
Throttling Valves.....G-81 03-04-71
Waterflood Inj. Wellhead Ass'y 2" 2220 & 3705 WP 2" Inlet...G-70 05-20-87
Waterflood Inj. Wellhead Ass'y 2" 2220 & 3705 WP 1" Inlet...G-71 05-20-87

Through Conduit
Application Instructions - 10,000 PSI.....G-73 06-10-83
2000, 3000 & 5000 WP.....G-75 06-10-83
2000, 3000 & 5000 WP Sour Service.....G-75A 02-14-88
10,000 PSI.....G-77 05-16-86
2000, 3000 & 5000 WP sold between 1976-1979.....G-76 04-09-84

APPLICATION INSTRUCTIONS
SERIES DM AND DB GATE VALVES

<u>CAUTION</u> – EXPOSURE OF THIS VALVE TO CERTAIN MEDIA OR OPERATING CONDITIONS LISTED BELOW MAY RESULT IN HAZARDOUS CONDITIONS. FAILURE TO FOLLOW THE INSTRUCTIONS HEREIN MAY RESULT IN LEAKAGE OR MALFUNCTION CAUSING PROPERTY DAMAGE AND/OR SERIOUS PERSONAL INJURY OR DEATH.

It is the responsibility of the user to determine the suitability of the valve and trim in his particular application. Regular maintenance schedules should be established, the intervals being determined by the length of satisfactory performance of the valve in the actual service conditions. A functional check is recommended weekly until the required interval is determined, except as stated below.

HYDROGEN SULFIDE

Hydrogen sulfide, even in small amounts, is extremely toxic and can cause embrittlement of metallic pressure containing parts. Valves to be used for hydrogen sulfide containing fluids must be specifically ordered for this type of service. All parts of such valves are carefully inspected for conformance with NACE MR-01-75 and one end of the valve body is stamped "NACE" for identification.

Elastomeric seat and seals may deteriorate in the presence of hydrogen sulfide. Establish a regular maintenance schedule by inspecting the seat and seals within six months of installation and every three months thereafter for hardening, softening, embrittlement, shrinkage and/or compression set. The durometer hardness of the elastomer should be between 65-90 Shore A (compare with a new o-ring) and the shrinkage or compression set must not be great enough to cause significant loss of compression of the elastomer against the mating metal parts. Replace seat and seals before these conditions occur.

CARBON DIOXIDE

DEMCO Series DM Gate Valves are giving satisfactory service in applications involving carbon dioxide. However, elastomeric seat and seals tend to absorb this gas and, depending on several factors, may swell to such an extent that the valve becomes difficult or impossible to operate and the seat may leak. Seat damage by sudden swelling may occur upon sudden decompression as when the valve is opened under high differential pressure. Satisfactory performance can be assured only by test under actual operating conditions.

NATURAL GAS ABOVE 3000 PSI

Standard elastomeric seat and seals absorb natural gas at high pressures and may swell to such an extent that the valve becomes difficult or impossible to operate. Seat damage may occur upon sudden decompression as when the valve is opened under high differential pressure. The valve should be ordered with special 90 durometer Buna-N seats for use in gas or multiphase systems above 3000 psi.

FORMATION FRACTURING PROPPING AGENTS

Use of a gate valve in formation fracturing service will cause the bonnet cavity to be filled with the propping agent (sand in particular) which may set up over a period of time, rendering the valve inoperable. The valve must be thoroughly flushed out as soon as possible after such use.

CEMENT

Use of a gate valve in cementing operations will cause the bonnet cavity to become filled with cement, which will set up in a short time, rendering the valve inoperable. The valve must be thoroughly flushed out before the cement sets up

ACIDIZING FLUIDS

The dilute acids used in acidizing of wells can become trapped in pockets and crevices in the areas of the valve seat and seals. Metalllic surfaces in contact with the seals in these areas may corrode, resulting in loss of sealing ability. Thoroughly flush the valve immediately after the acidizing treatment is finished.

SEVERE PRESSURE PULSATION

If a valve is to be located close to a positive displacement pump, it should be protected by a pulsation damper to reduce exposure to body stud failure and excessive wear of gate and seat. A relief valve should be installed in the system to insure that the working pressure rating of the valve is not exceeded.

EXTREME VIBRATION

Severe vibration such as may be found close to a pump or other source can cause excessive wear of valve gates, seats and other moving parts resulting in leakage or malfunction. Vibration at the valve must be eliminated or reduced to an acceptable level.

TEMPERATURE ABOVE 200°F

Temperature above the ratings of the elastomeric seat and seals (200°F for Buna-N, 400°F for Viton) will in a short period of time cause them to soften and take compression set, resulting in loss of sealing ability. Exposure to extremely high temperatures, as might

occur during a fire, can cause disintegration of these parts. Following exposure to high temperature, the seat and seals should be inspected for hardening, embrittlement, shrinkage or compression set. Hardness should not exceed 90 Durometer A for good sealability (compare with a new 90 Durometer o-ring) and the shrinkage or compression set must not be great enough to cause significant loss of compression of the elastomer against the mating metal parts. Replace seat and seals if they have been damaged to this extent.

THROTTLING CONDITIONS

A gate valve should never be left in a throttling condition (partially open) during service. The resulting high velocity line fluids may cause erosion of the gate and seat and result in loss of sealing ability. Throttling conditions also occur momentarily during opening or closing of the valve against high differential pressure/high flow rates. The life of the gate and seat will be substantially increased by avoiding these conditions. We suggest that these parts be inspected for erosion after every 50 operations until a regular maintenance schedule can be established.

CLOSING AGAINST HIGH PRESSURE

In addition to creating throttling conditions (see above paragraph), closing a valve against high pressure requires more effort than closing against low pressure and causes a higher rate of wear on the operating mechanism. It will at times be necessary to close the valve against high pressure and in such instance the operating personnel must have sufficient room and footing to perform this task. The piping system should be designed accordingly. We suggest that the threaded parts be inspected after every 100 operations until a regular maintenance schedule can be established. The parts should be replaced if the threads are worn beyond 80% of their original thickness.

REASSEMBLY PROCEDURE

Following disassembly for repairs, the valve must be reassembled in accordance with the instructions on Data Sheet G-2, G-3, G-5, G-6 or G-7 (copy obtainable from Cooper Cameron Valves, Oklahoma City, Oklahoma 73143) as applicable. Otherwise the valve may not close fully, resulting in erosion to gate and seat, or may close too far resulting in seat damage, or the stem or gate may become disengaged from their mating parts upon closing of the valve.

CAMERON

DEMCO

CLASS 400 & 600 SERIES DM GATE VALVES 1-1/2" FULL PORT, 2" REGULAR PORT & 2" FULL PORT FOR GENERAL SERVICE

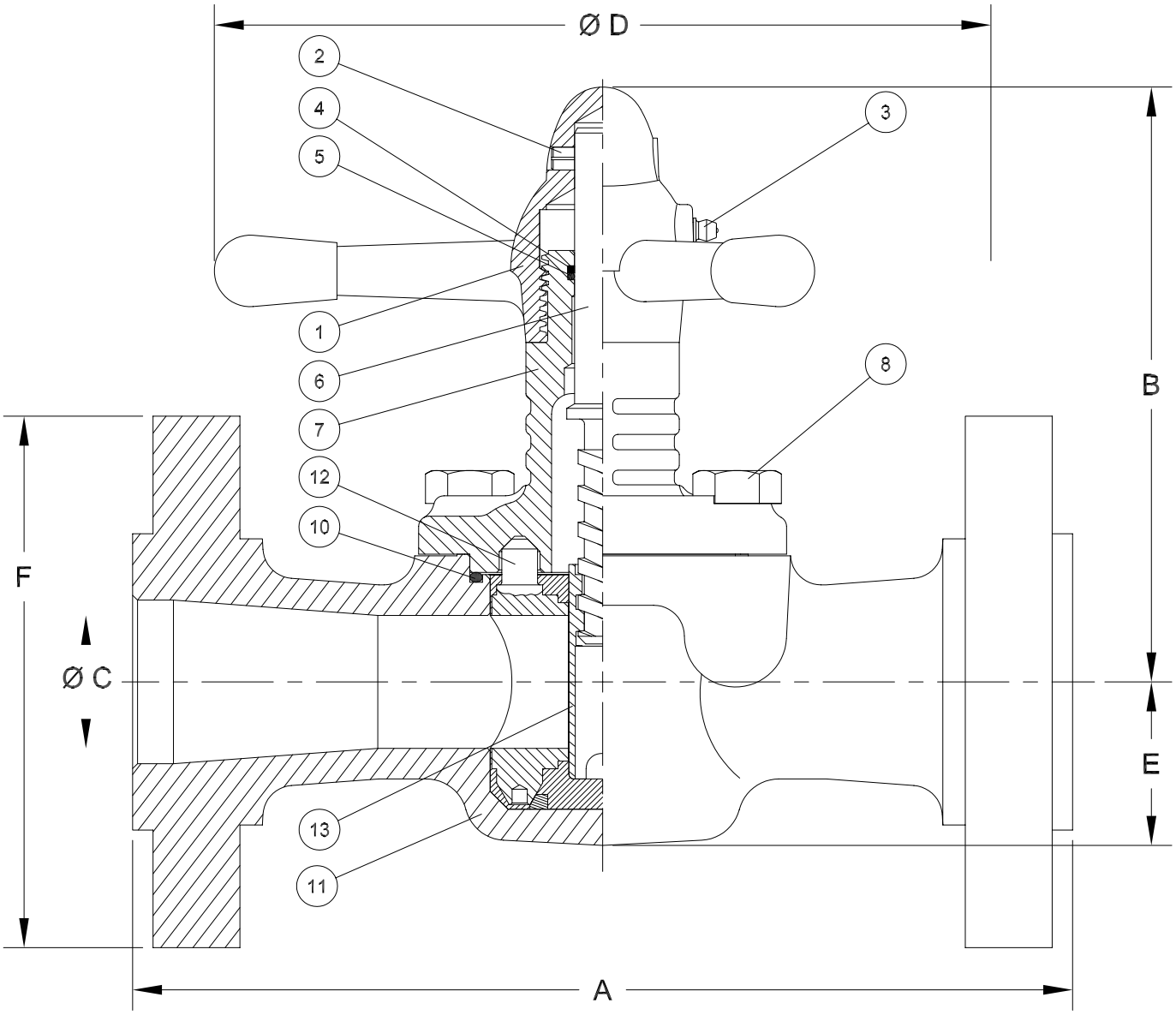

DIMENSIONAL DATA

DIMENSION \ VALVE SIZE	1–1/2"		2"	
CLASS	400	600	400	600
A – FULL PORT – SCREWED, WELD, GROOVED	7.75		8.88	
– REGULAR PORT – SCREWED	– – –		7.75	
– FLANGED – RF	– – –		11.50	
– RTJ	– – –		11.62	
B (OPEN) – FULL PORT	7.75		8.75	
– REGULAR PORT	– – –		7.75	
C (SEAT BORE) – FULL PORT	1.62		2.00	
– REGULAR PORT	– – –		1.62	
D – FULL PORT	9.50		11.00	
– REGULAR PORT	– – –		9.50	
E – FULL PORT	2.00		2.19	
– REGULAR PORT	– – –		2.00	
F (FLANGE DIAMETER)	– – –		6.50	
FLANGE BOLTS (QTY. – SIZE)	– – –		8 – 5/8	
RING NUMBER (RTJ)	– – –		R–23	

ASSEMBLY PART NUMBER

END CONNECTION — FLANGED	0 – 400 RTJ 1 – 400 RF 2 – 600 RTJ 3 – 600 RF
END CONNECTION — THREADED	0 – API LP 1 – NU 2 – EU
END CONNECTION — GROOVED	0 – Sch 80
END CONNECTION — WELD	0 – Sch 40
BODY CONFIGURATION	4 – THREADED 5 – WELD 6 – GROOVED 7 – FLANGED
STEM MATERIAL	2 – 303 SS 8 – 316 SS
GATE MATERIAL *	2 – STEEL 8 – 316 SS
INSERT MATERIAL *	1 – DUCTILE IRON OR STEEL 8 – 316 SS
SEAT/SEAL ELASTOMER	1 – BUNA–N/BUNAN 2 – VITON/VITON 3 – HYPALON/BUNA–N
COATING	1 – DEMCO 10 4 – DEMCO 11 5 – DEMCO 12 WELD END BODIES ARE NOT COATED.

ASSEMBLY BASE PART NUMBER

J00XXXX – X X X X X X X * CONSULT FACTORY FOR ADDITIONAL TRIM OPTIONS.

PARTS LIST

INDEX	REQD.	DESCRIPTION / VALVE SIZE / CLASS	1–1/2" FULL & 2" REG. 400	1–1/2" FULL & 2" REG. 600	2" FULL 400	2" FULL 600
		ASSEMBLY BASE PART NUMBER – FULL – THREADED	J003932	J003938	J001071	J001072
		– WELD	– – –	– – –	J001091	J001092
		– GROOVED	– – –	– – –	J001081	J001082
		– FLANGED	– – –	– – –	J001061	J001062
		– REGULAR – THREADED	J003933	J003939	– – –	– – –
1	1	HANDLE Ductile Iron ASTM A536 Grade 65–45–12	J004375		J001276	
2	1	STEM PIN Spring Steel	J005445–25020		J005445–37528	
3	1	LUBE FITTING Steel	J005195		J005195	
4	1	BACK–UP RING Chrome Leather	J005532–115		J005532–211	
5	1	STEM SEAL Buna–N	J005526–115		J005526–211	
		Viton	J005531–115		J005531–211	
6	1	STEM 303 SS –002, 316 SS –008	J004376–XXX		J001279–XXX	
7	1	BONNET DUCTILE IRON ASTM A395	– – –		J001277–01X	– – –
		Steel ASTM A216 Grade WCB	J004330–02X		– – –	J001277–02X
		Coatings	Uncoated –0X0, DEMCO 10 –0X1 DEMCO 11 –0X4, DEMCO 12, –0X5			
8	4	BODY SCREW SAE Grade 5	J005651–32024		J005651–32024	
10	1	BONNET SEAL Buna–N	J005526–234		J005526–239	
		Viton	J005531–234		J005531–239	
11	1	BODY MATERIALS: 2" FULL CLASS 400 THREADED, (EXCEPT THREADED API LP), GROOVED, AND FLANGED: DUCTILE IRON ASTM A395 2" FULL CLASS 600 THREADED, (EXCEPT THREADED API LP), WELD, AND GROOVED: FORGED STEEL AISI C1029 NORMALIZED 2" FULL CLASS 400 & 600 THREADED API LP: STEEL, ASTM A216 GR WCC ALL OTHERS: STEEL, ASTM A216 GRADE WCB COATINGS (EXCEPT WELD END BODIES): DEMCO 10, DEMCO 11, DEMCO 12	CONSULT FACTORY FOR BODY PART NUMBERS			
12	1	SEAT	J004081–0XX		J001876–0XX	
		Materials	INSERTS: –01X Ductile Iron ASTM A395 or Steel AISI 1040 –08X Stainless Steel ASTM A351 Grade CF8M Annealed ELASTOMERS: –0X1 Buna–N –0X2 Viton –0X3 Hypalon			
13	1	GATE	J004393–00X		J001275–00X	
		Materials: –002 Steel, Nickel Plated –008 Stainless Steel	AISI C1144 AISI 316 Annealed		AISI C1045 ASTM A351 CF8M Annealed	

CAMERON

DEMCO

CLASS 400 & 600 SERIES DM GATE VALVES
2-1/2" AND 3" FULL PORT THRU 8" REGULAR PORT
FOR GENERAL SERVICE

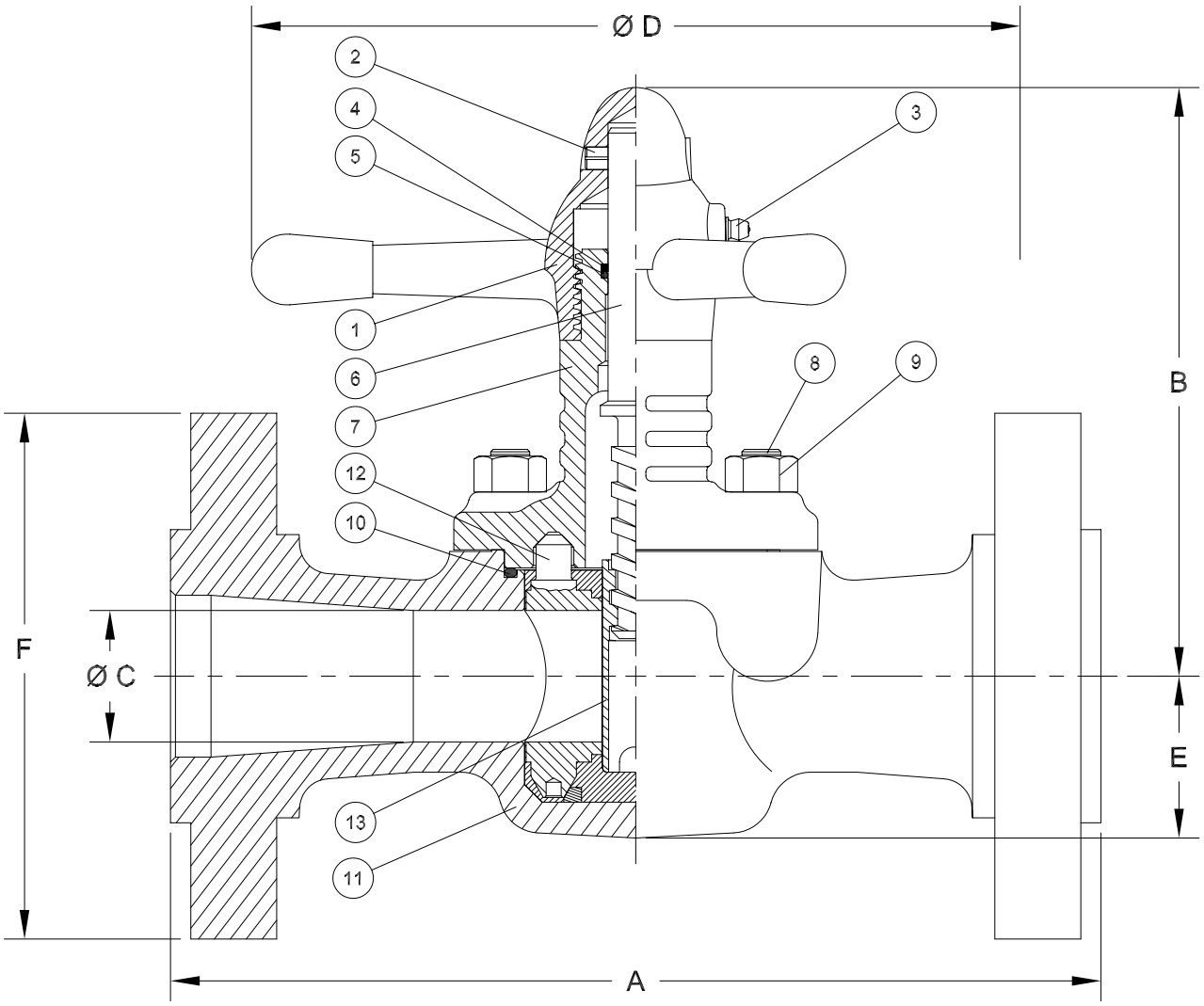

DIMENSIONAL DATA

DIMENSION \ VALVE SIZE	2–1/2"		3"		4"		6"		8"
CLASS	400	600	400	600	400	600	400	600	600
A – SCREWED, WELD, GROOVED	10.00		10.25		11.88		15.50		– – –
– FLANGED – RF	13.00		14.00		16.00	17.00	19.50	22.00	26.00
– RTJ	13.12		14.12		16.12	17.12	19.62	22.12	26.12
B (OPEN) – FULL PORT	10.62		11.38		13.88		19.25		– – –
– REGULAR PORT	– – –		– – –		– – –		– – –		19.25
C (SEAT BORE) – FULL PORT	2.50		3.00		4.00		6.00		– – –
– REGULAR PORT	– – –		– – –		– – –		– – –		6.00
D – FULL PORT	12.62		12.62		14.25		24.00		– – –
– REGULAR PORT	– – –		– – –		– – –		– – –		24.00
E – FULL PORT	2.75		3.19		3.94		5.62		– – –
– REGULAR PORT	– – –		– – –		– – –		– – –		5.62
F (FLANGE DIAMETER)	7.50		8.25		10.00	10.75	12.50	14.00	16.50
FLANGE BOLTS (QTY. – SIZE)	8 – 3/4		8 – 3/4		8 – 7/8		1		12 – 1–1/8
RING NUMBER (RTJ)	R26		R31		R37		R45		R49

ASSEMBLY PART NUMBER

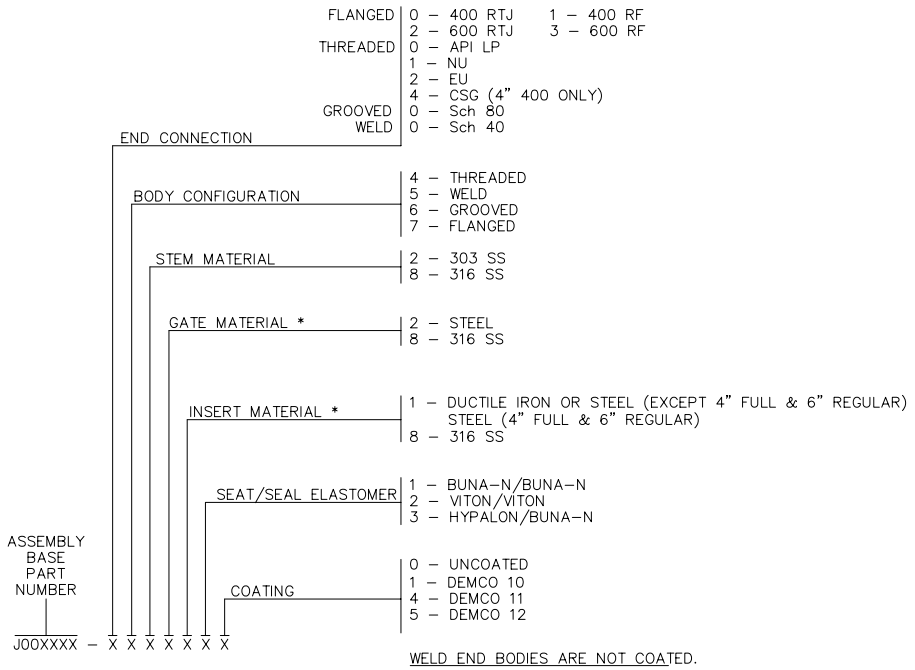

* CONSULT FACTORY FOR ADDITIONAL TRIM OPTIONS.

PARTS LIST

INDEX	REQD.	DESCRIPTION \ VALVE SIZE / CLASS	2–1/2" FULL 400	2–1/2" FULL 600	3" FULL 400	3" FULL 600	4" FULL 400	4" FULL 600	6" FULL & 8" REG. 400	6" FULL & 8" REG. 600
		ASSEMBLY BASE PART NUMBER – FULL – THREADED	J001073	J001074	J001075	J001076	J001077	J001078	J001079	J001080
		– WELD	J001093	J001094	J001095	J001096	J001097	J001098	J001099	J001100
		– GROOVED	J001083	J001084	J001085	J001086	J001087	J001088	J001089	J001090
		– FLANGED	J001063	J001064	J001065	J001066	– – –	J001068	J001069	J001070
		– REGULAR – FLANGED	– – –	– – –	– – –	– – –	– – –	– – –	– – –	J003945
1	1	HANDLE Ductile Iron ASTM A536 Grade 65–45–12	J001290		J001290		J001849		J001850	
2	1	STEM PIN Spring Steel	J005445–37528		J005445–37528		J005445–37532		J005445–37532	
3	1	LUBE FITTING Steel	J005195		J005195		J005195		J005195	
4	1	BACK–UP RING Chrome Leather	J005532–212		J005532–212		J005532–214		J005532–214	
5	1	STEM SEAL Buna–N	J005526–212		J005526–212		J005526–214		J005526–214	
		Viton	J005531–212		J005531–212		J005531–214		J005531–214	
6	1	STEM 303 SS –002, 316 SS –008	J001291–XXX		J001291–XXX		J001853–XXX		J001854–XXX	
7	1	BONNET ASTM A395 Ductile Iron	---		J001856–01X	---	J001857–01X	---	J001858–01X	---
		ASTM A216 Grade WCB	J001293–02X		---	J001856–02X	---	J001857–02X	---	J001858–02X
		Coatings	Uncoated –0X0, DEMCO 10 –0X1 DEMCO 11 –0X4, DEMCO 12 –0X5				Uncoated –0X0, DEMCO 10 –0X1 DEMCO 11 –0X4, DEMCO 12 –0X5			
8	4	BODY STUD ASTM A193 Grade B7	J002066		J001861		J001862		J001863	
9	4	BODY STUD NUT ASTM A194 Grade 2H	2709000–08–01		2709000–09–01		2709000–10–01		2709000–14–01	
10	1	BONNET SEAL Buna–N	J005526–245		J005526–249		J005526–258		J005526–446	
		Viton	J005531–245		J005531–249		J005531–258		J005531–446	
11	1	BODY MATERIALS: CLASS 400: 3" FULL THRU 6" FULL THREADED, GROOVED AND FLANGED: DUCTILE IRON ASTM A395 ALL OTHERS: STEEL, ASTM A216 GRADE WCB COATINGS (EXCEPT WELD END BODIES): DEMCO 10, DEMCO 11, DEMCO 12	CONSULT FACTORY FOR BODY PART NUMBERS				CONSULT FACTORY FOR BODY PART NUMBERS			
12	1	SEAT	J001877–0XX		J001878–0XX		J002207–0XX		J001880–0XX	
		Materials	INSERTS: –01X Ductile Iron ASTM A395 or Steel AISI 1040 –08X Stainless Steel ASTM A351 Grade CF8M Annealed ELASTOMERS: –0X1 Buna–N –0X2 Viton –0X3 Hypalon				INSERTS: –02X Steel AISI 1040 INSERTS –08X Stainless Steel ASTM A351 Grade CF8M Annealed ELASTOMERS: –0X1 Buna–N –0X2 Viton –0X3 Hypalon		INSERTS: –01X Ductile iron ASTM A395 or Steel AISI 1040	
13	1	GATE	J001881–00X		J001882–00X		J001883–00X		J001884–00X	
		Materials	–002 Steel AISI 1045, Nickel Plated –008 316 SS Annealed				–002 Steel AISI 1045, Nickel Plated –008 316 SS Annealed			

CAMERON

DEMCO

G-14
9-8-05
SHEET 1 OF 2

CLASS 400 SERIES DM GATE VALVE
4-1/16" FULL PORT
FOR GENERAL SERVICE

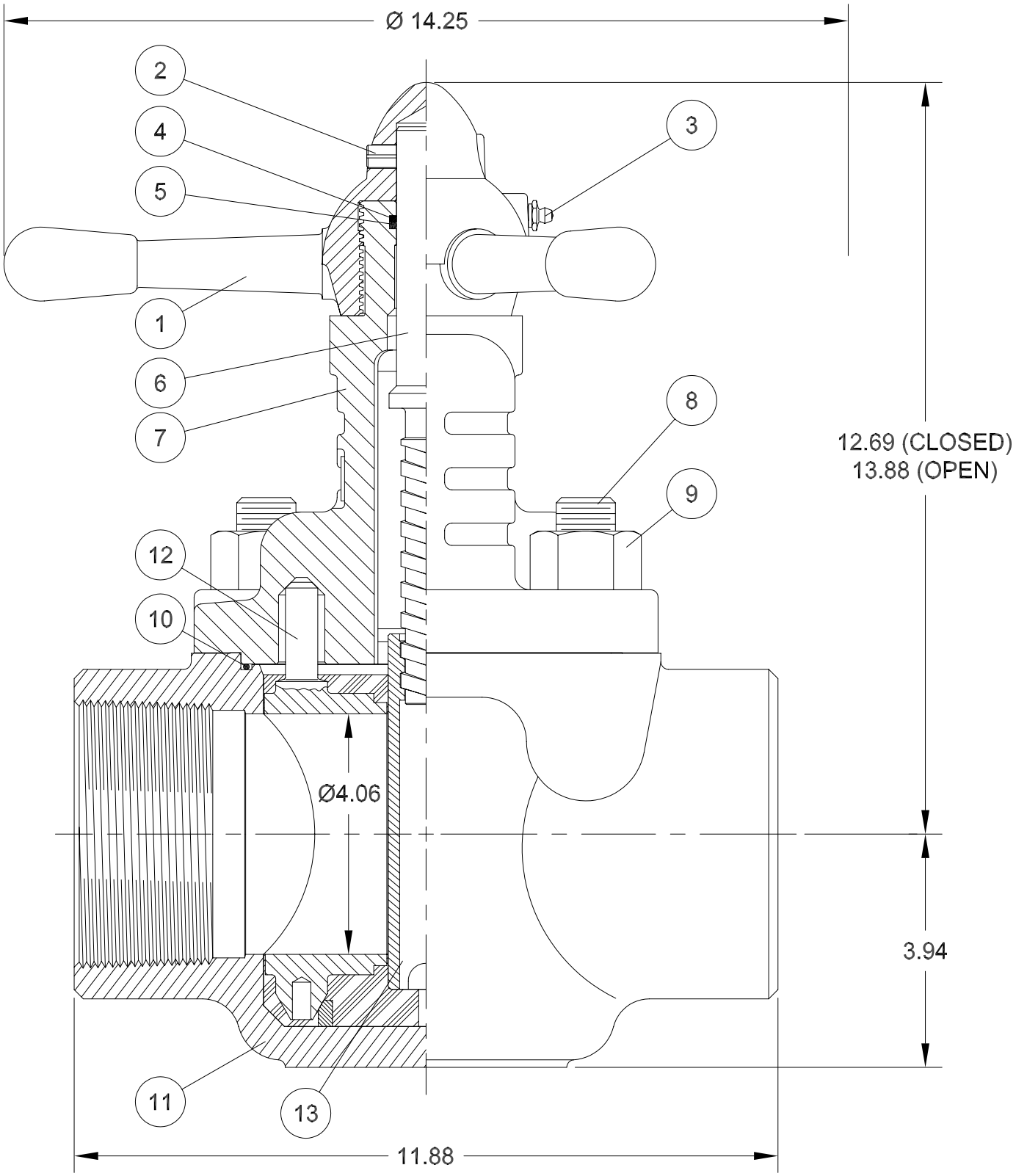

CAMERON

DEMCO

5000 WP SERIES DM GATE VALVES
5 x 4 AND 6 x 4 RTJ (12-BOLT)
FOR GENERAL SERVICE

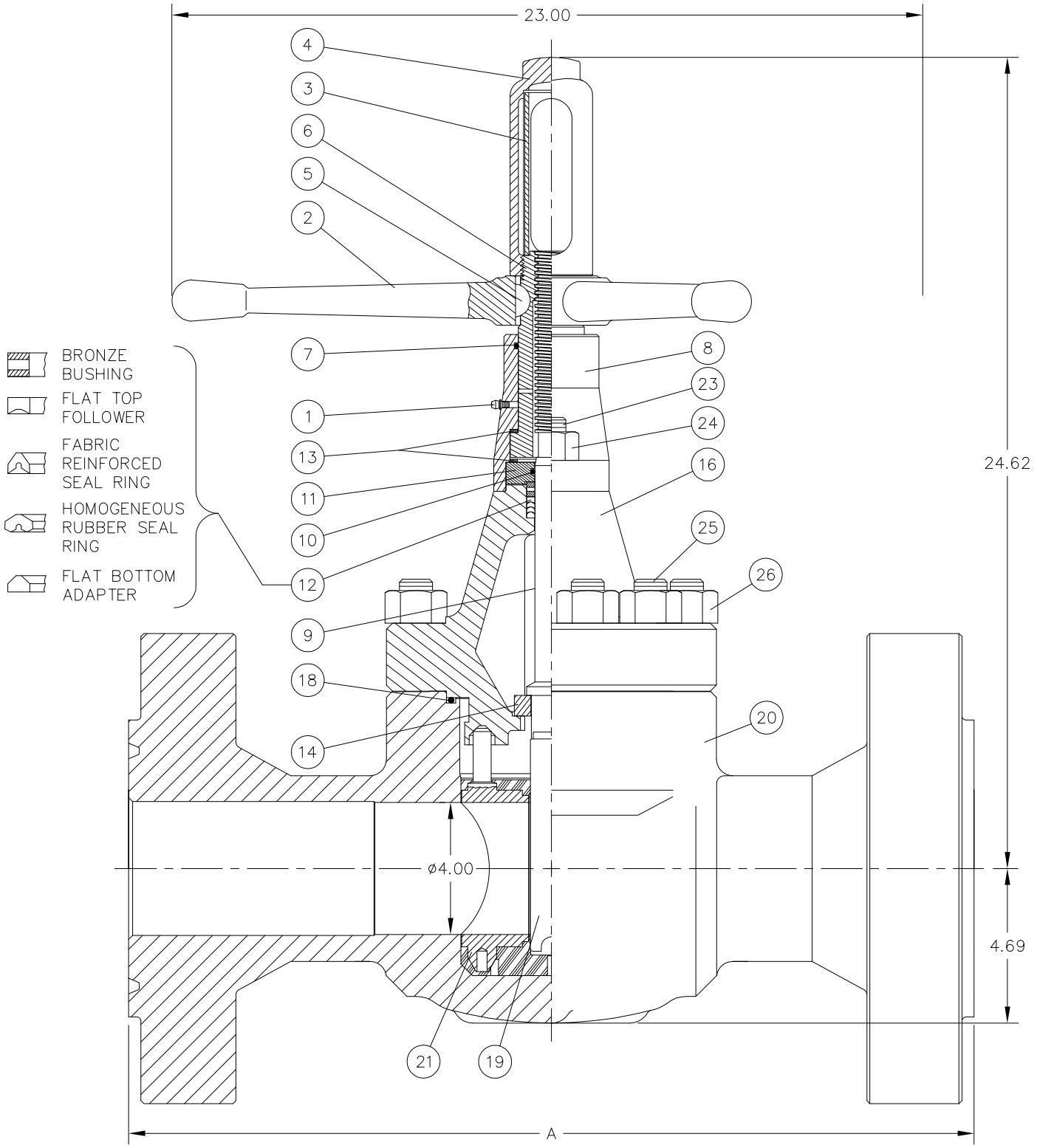

DIMENSIONAL DATA

DIMENSION \ VALVE SIZE	5 x 4	6 x 4
A – RTJ	25.88	27.25
FLANGE O.D.	14.75	15.50
FLANGE BOLTS	8 – 1–1/2 DIA.	12 – 1–3/8
RING NUMBER (RTJ)	R–44	R–46
TURNS TO OPEN	23	

ASSEMBLY PART NUMBER

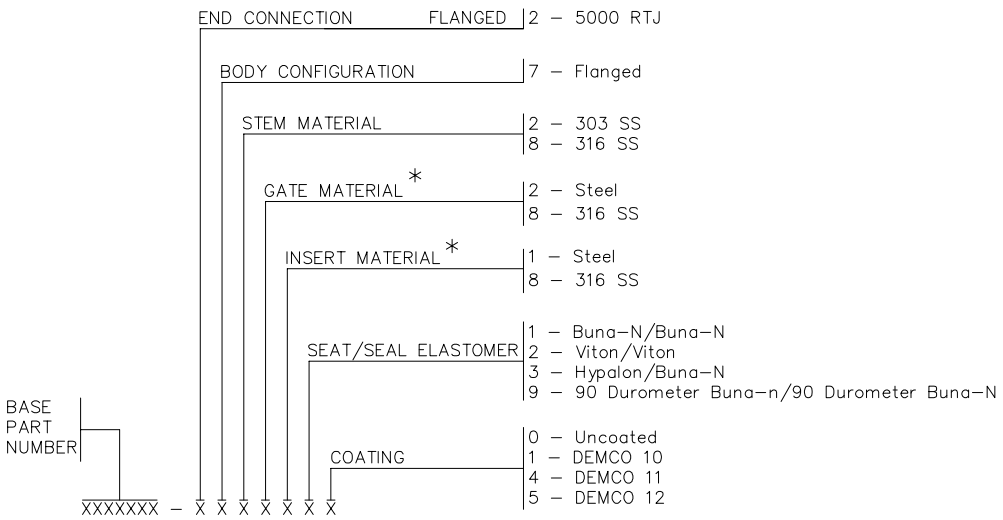

* Consult factory for other trim options.

PARTS LIST

	INDEX	REQD.	DESCRIPTION / VALVE SIZE	5 x 4 AND 6 x 4 5000 WP 7500 TEST
			ASSEMBLY BASE NUMBER – 5 x 4 – RTJ	J025138
			– 6 x 4 – RTJ	J025140
	1	1	LUBE FITTING Steel	J005195
	2	1	HANDLE ASTM A536 Ductile Iron	2139481–01
	3	1	TUBE Clear Acrylic	J007459
	4	1	STEM CAP ASTM A536 Ductile Iron	J007411
	5	1	KEY Steel	J005305–10016
	6	1	STEM SCREW C1213	J007416
	7	1	STEM SCREW SEAL Buna–N	J005526–226
	8	1	SCREW HOUSING C1029	J007418
	9	1	STEM 303 SS –002, 316 SS –008	J007439–XXX
	10	1	SECONDARY SEAL Buna–N	J005526–214
	11	1	RETAINER C1213	J007413
*	12	1	STEM SEAL ASSEMBLY Buna–N	J001951–001
			Viton	J001951–006
			90 Durometer Buna–N	J022093–001
	13	2	BEARING TEFLON/Phenolic	J007426
	14	1	DOWNSTOP RING 303 SS	J007417
	16	1	BONNET ASTM A487 Grade 4 Class C	J017289–03X
			Coatings	Uncoated –030, DEMCO 10 –031, DEMCO 11 –034, DEMCO 12 –035
*	18	1	BONNET SEAL Buna–N	J005520–361
			Viton	J005531–361
*	19	1	GATE	J001926–00X
			MATERIALS	AISI 4130 NICKEL PLATED –002 ASTM A351 GRADE CF8M –008
	20	1	BODY MATERIALS: ASTM A487 GRADE 4 CLASS A/AISI 4130 FLANGES COATINGS: DEMCO 10, DEMCO 11, DEMCO 12	CONSULT FACTORY FOR BODY PART NUMBERS
*	21	1	SEAT ASSEMBLY	J002207–0XX
			MATERIALS	INSERTS: –02X Steel AISI 1040 –08X Stainless Steel ASTM A351 Grade CF8M Annealed ELASTOMERS: –0X1 Buna–N –0X2 Viton –0X3 Hypalon –0X9 90 Durometer Buna–N
	23	2	BONNET STUD ASTM A193 Grade B7	J002072
	24	2	BONNET STUD NUT ASTM A194 Grade 2H	2709000–09–01
	25	12	BODY STUD ASTM A193 Grade B7	J015432
	26	12	BODY STUD NUT ASTM A194 Grade 2H	2709000–10–01

* RECOMMENDED SPARE PARTS – ONE EACH FOR ONE YEAR'S SERVICE.

CAMERON

DEMCO

5000 WP SERIES DM GATE VALVES
4" FULL PORT, RTJ (4-BOLT)
FOR GENERAL SERVICE

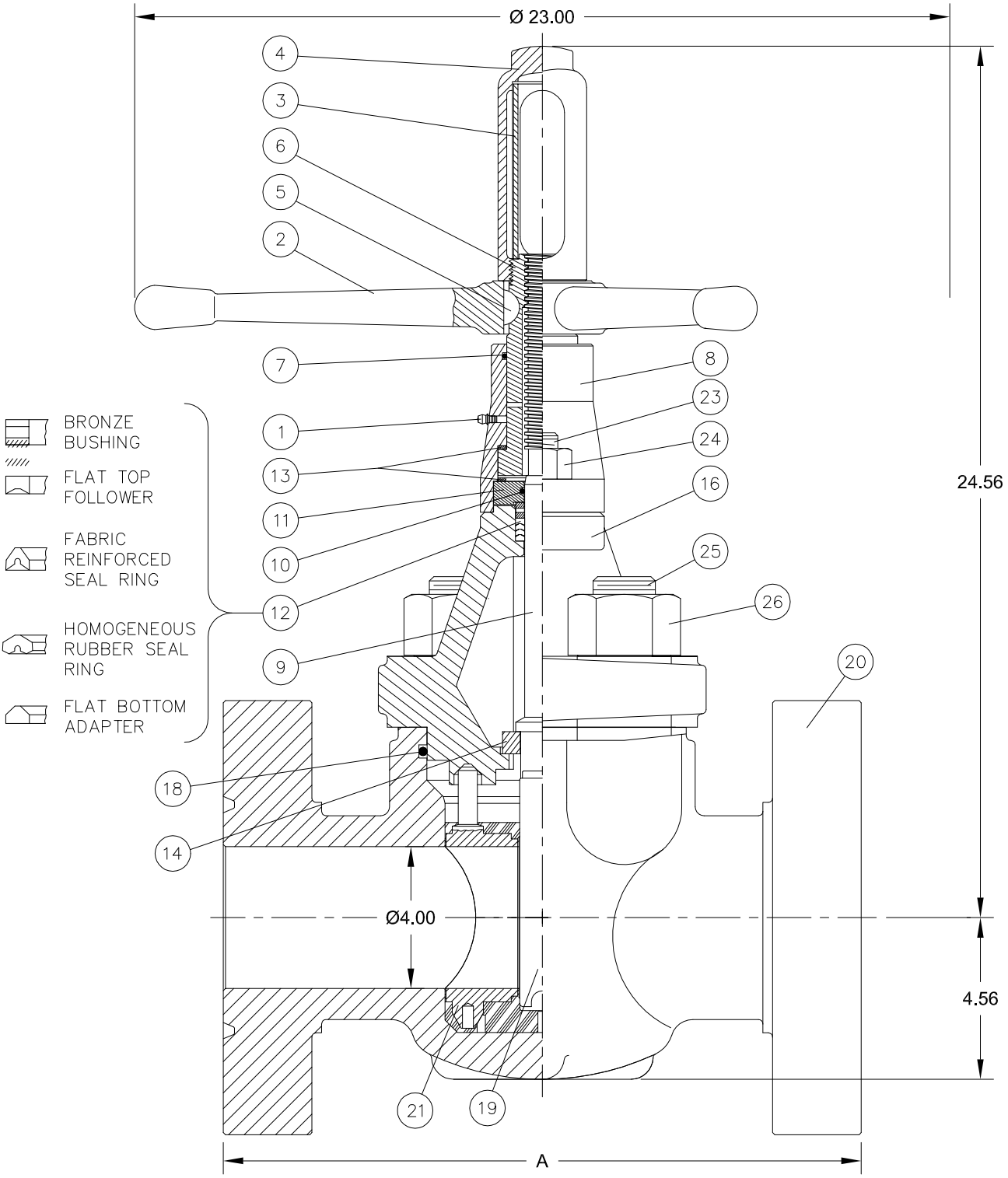

DIMENSIONAL DATA AND WEIGHTS

VALVE SIZE / DIMENSION	4" FULL PORT	5"X4" REGULAR PORT
A – FLANGED	18.00	25.88
TURNS TO OPEN	23	
FLANGE O.D.	12.25	14.75
FLANGE BOLTS	8 – 1-1/4 DIA.	8 – 1-1/2 DIA.
RING NUMBER (RTJ)	R-39	R-44
WEIGHT, LB.	330	

ASSEMBLY PART NUMBER

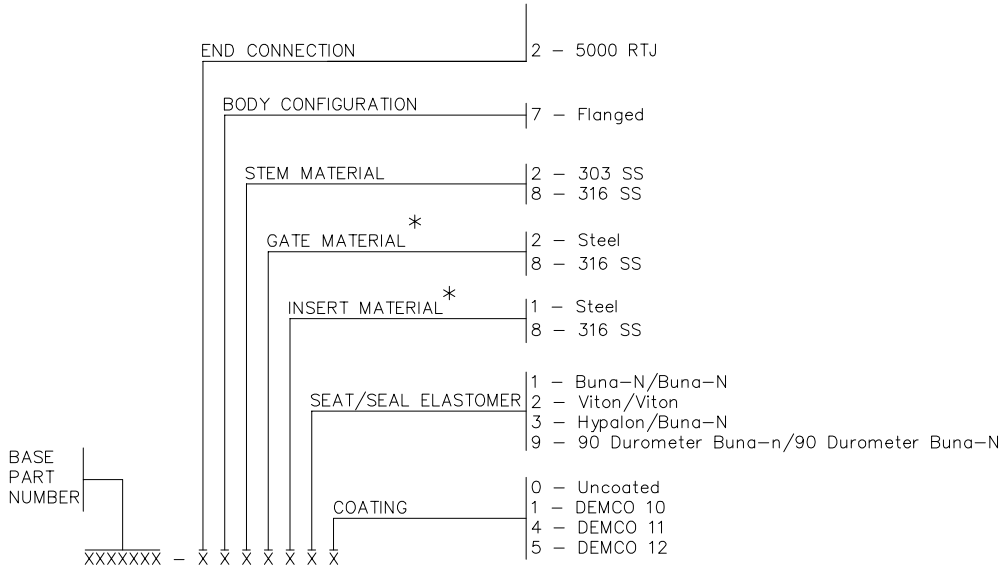

* Consult factory for other trim options.

PARTS LIST

INDEX	REQD.	DESCRIPTION / VALVE SIZE	4" FULL PORT 5" REGULAR PORT 5000 WP 7500 TEST
		ASSEMBLY BASE NUMBER – 4" FULL PORT RTJ	J007420
1	1	LUBE FITTING Steel	J005195
2	1	HANDLE ASTM A536 Ductile Iron	2139481–01
3	1	TUBE Clear Acrylic	J007459
4	1	STEM CAP ASTM A536 Ductile Iron	J007411
5	1	KEY Steel	J005305–10016
6	1	STEM SCREW C1213	J007416
7	1	STEM SCREW SEAL Buna–N	J005526–226
8	1	SCREW HOUSING C1029	J007418
9	1	STEM 303 SS –002, 316 SS –008	J007439–XXX
10	1	SECONDARY SEAL Buna–N	J005526–214
11	1	RETAINER C1213	J007413
* 12	1	STEM SEAL ASSEMBLY Buna–N	J001951–001
		Viton	J001951–006
		90 Durometer Buna–N	J022093–001
13	2	BEARING TEFLON/Phenolic	J007426
14	1	DOWNSTOP RING 303 SS	J007417
16	1	BONNET ASTM A487 Grade 4 Class C or Grade 2 Class B	J007419–XXX
		Coatings	Uncoated –030, DEMCO 10 –031, DEMCO 11 –034, DEMCO 12 –035
* 18	1	BONNET SEAL Buna–N	J005520–439
		Viton	J005531–439
* 19	1	GATE	J001926–00X
		MATERIALS	AISI 4140 NICKEL PLATED –002 CAST MONEL TYPE S –003 ASTM B148 ALLOY 953 –004 ASTM A351 GRADE CF8M –008
20	1	BODY MATERIALS: ASTM A487 GRADE 4 CLASS A COATINGS (EXCEPT WELD END BODIES): DEMCO 10, DEMCO 11, DEMCO 12	CONSULT FACTORY FOR BODY PART NUMBERS
* 21	1	SEAT ASSEMBLY	J002207–0XX
		MATERIALS	INSERTS: –02X Steel AISI C1040 –08X Stainless Steel ASTM A351 Grade CF8M Annealed ELASTOMERS: –0X1 Buna–N –0X2 Viton –0X3 Hypalon –0X9 90 Durometer Buna–N
23	2	BONNET STUD ASTM A193 Grade B7	J002072
24	2	BONNET STUD NUT ASTM A194 Grade 2H	2709000–09–01
25	4	BODY STUD ASTM A193 Grade B7	J002077
26	4	BODY STUD NUT ASTM A194 Grade 2H	J001890

* RECOMMENDED SPARE PARTS – ONE EACH FOR ONE YEAR'S SERVICE.

ASSEMBLY PART NUMBER

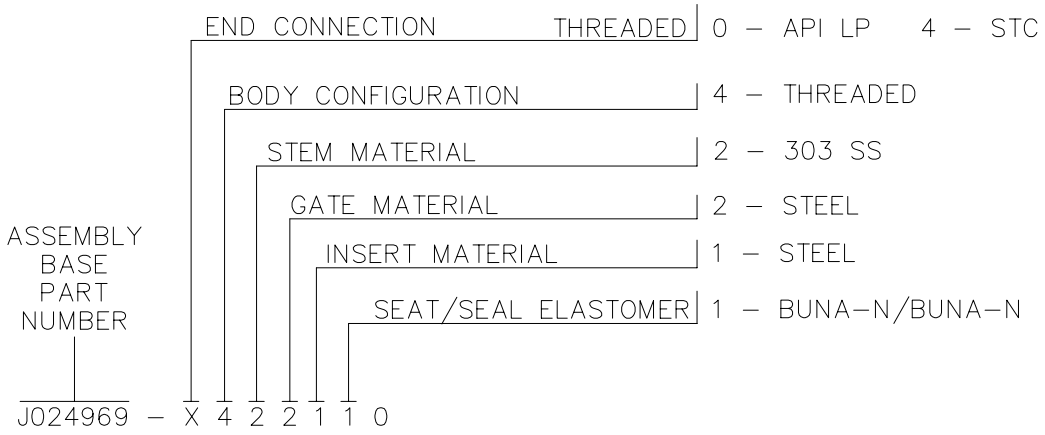

PARTS LIST

INDEX	REQD.	DESCRIPTION / VALVE SIZE		4–1/16" FULL
			CLASS	400
		ASSEMBLY BASE PART NUMBER – FULL – THREADED		J024969
1	1	HANDLE	Ductile Iron ASTM A536 Grade 65–45–12	J001849
2	1	STEM PIN	Spring Steel	J005445–37532
3	1	LUBE FITTING	Steel	J005195
4	1	BACK–UP RING	Chrome Leather	J005532–214
5	1	STEM SEAL	Buna–N	J005526–214
6	1	STEM	303 SS –002	J001853–002
7	1	BONNET	ASTM A395 Ductile Iron	J001857–010
8	4	BODY STUD	ASTM A193 Grade B7	J001862
9	4	BODY STUD NUT	ASTM A194 Grade 2H	2709000–10–01
10	1	BONNET SEAL	Buna–N	J005526–258
11	1	BODY MATERIAL: DUCTILE IRON ASTM A395		CONSULT FACTORY FOR BODY PART NUMBERS
12	1	SEAT		2139280–01
			Material	INSERTS: Steel AISI 1040 ELASTOMER: Buna–N
13	1	GATE		J001883–002
			Material	–002 Steel AISI 1040, Nickel Plated

CAMERON

DEMCO

SERIES DM GATE VALVES
CLASS 900 2" - 6" FULL PORT
CLASS 1500 2" - 3" FULL PORT
FOR GENERAL SERVICE

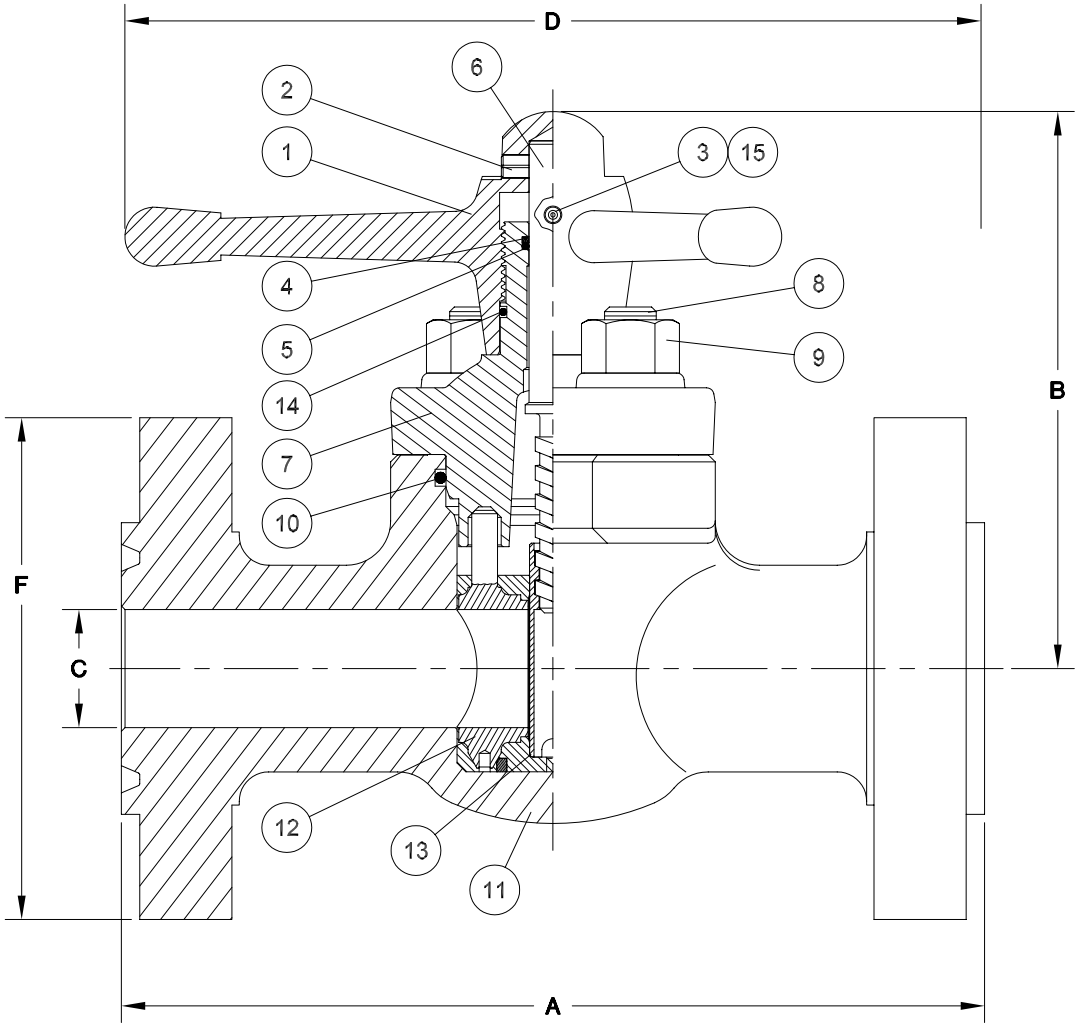

DIMENSIONAL DATA AND WEIGHTS

DIMENSION \ VALVE SIZE	2"		2-1/2"		3"		4"	6"
CLASS	900	1500	900	1500	900	1500	900	900
A – THREADED, WELD, GROOVED	9.00		9.75		11.00		13.00	20.00
– FLANGED – RF	14.50		16.50		15.00	18.50	18.00	24.00
– RTJ	14.62		16.62		15.12	18.62	18.12	24.12
B (OPEN)	9.88		22.88		12.75		15.00	19.25
C (SEAT BORE)	2.00		2.50		3.00		4.00	6.00
D	14.50		19.00		19.00		23.00	24.00
F (FLANGE DIAMETER)	8.50		9.62		9.50	10.50	11.50	15.00
FLANGE BOLTS (QTY. – SIZE)	8 – 7/8		8 – 1		8 – 7/8	8 – 1-1/8	8 – 1-1/8	12 – 1-1/8
RING NUMBER (RTJ)	R24		R27		R31	R35	R37	R45
WEIGHT (LB.) – THREADED, WELD, GROOVED	48		87		95	113	140	325
– FLANGED	100		170		160	205	230	540

ASSEMBLY PART NUMBER

END CONNECTION
- FLANGED: 4 – 900 RTJ 5 – 900 RF
- FLANGED: 6 – 1500 RTJ 7 – 1500 RF
- THREADED: 0 – API LP
- THREADED: 1 – NU
- THREADED: 2 – EU
- GROOVED: 0 – Sch 80
- WELD: 0 – Sch 40 1 – Sch 80 5 – Sch 160

PIPE SIZE	STD. WELD END SUFFIX CLASS 900	CLASS 1500
2"	– – –	– – –
2-1/2"	0 & 1	0, 1 & 5
3"	0 & 1	0, 1 & 5
4"	0 & 1	– – –
6"	0 & 1	– – –

BODY CONFIGURATION: 4 – THREADED 5 – WELD 6 – GROOVED 7 – FLANGED

STEM MATERIAL: 2 – 303 SS 8 – 316 SS

GATE MATERIAL *: 2 – STEEL 8 – 316 SS

INSERT MATERIAL *: 1 – DUCTILE IRON OR STEEL (4") 8 – 316 SS

SEAT/SEAL ELASTOMER:
- 1 – BUNA –N/BUNA–N
- 2 – VITON/VITON
- 3 – HYPALON/BUNA–N

COATING:
- 1 – DEMCO 10 4 – DEMCO 11 5 – DEMCO 12

Weld end bodies are not coated.

ASSEMBLY BASE PART NUMBER

J00XXXX – X X X X X X X

* CONSULT FACTORY FOR ADDITIONAL TRIM OPTIONS.

PARTS LIST

	INDEX	REQD.	DESCRIPTION \ VALVE SIZE / CLASS	2" ‡ 900	2" ‡ 1500	2-1/2" 900	2-1/2" 1500	3" 900	3" 1500	4" 900	6" 900
			ASSEMBLY BASE PART NUMBER	J003947	J003948	J003951	J003952	J003953	J003957	J003955	J003999
	1	1	HANDLE Ductile Iron ASTM A536 Grade 65–45–12	J023661		J018195		J0018195		J023663	J001850
	2	1	STEM PIN Spring Steel	J005445–37528		J005445–37528		J005445–37528		J005445–37532	
	3	1	LUBE FITTING Steel	J005195		J005195		J005195		J005195	
	4	1	BACK–UP RING Chrome Leather	J005532–211		J005532–212		J005532–212		J005532–214	
*	5	1	STEM SEAL Buna–N	J005526–211		J005526–212		J005526–212		J005526–214	
			Viton	J005531–211		J005531–212		J005531–212		J005531–214	
	6	1	STEM 303 SS –002, 316 SS –008	J004395–XXX		J004396–XXX		J004396–XXX		J004397–00X	J001854–00X
	7	1	BONNET ASTM A487 Grade 4 Class A	J004320–03X		J004322–03X		J004324–03X	J004326–03X	J004328–03X	J001780–03X
			Coatings	Uncoated – 030, DEMCO 10 –031 DEMCO 11 –034, DEMCO 12 –035							
	8	4	BODY STUD	J002072		J002074		J002072	J002074	J002074	J002077
	9	4	BODY STUD NUT ASTM A194 Grade 2H	2709000–09–01		2709000–10–01		2709000–09–01	27090000–10–01	27090000–10–01	J001890
*	10	1	BONNET SEAL Buna–N	J005526–342		J005526–427		J005526–431	J005526–433	J005526–438	J005526–446
			Viton	J005531–342		J005531–427		J005531–431	J005531–433	J005531–438	J005531–446
	11	1	BODY MATERIALS: ASTM A487 GRADE 4 CLASS A OR GRADE 2 CLASS B	CONSULT FACTORY FOR BODY PART NUMBERS							
*	12	1	SEAT ASSEMBLY	J001876–0XX		J001877–0XX		J001878–0XX		J002207–0XX	J001880–0XX
			Materials	INSERTS: –01X DUCTILE IRON ASTM A 395 OR STEEL AISI C1040 –08X 316 SS ASTM A351 GRADE CF8M ANNEALED ELASTOMERS: –0X1 BUNA–N –0X2 VITON –0X3 HYPALON							
*	13	1	GATE	J001275–XXX		J001881–XXX		J001882–00X		J001883–00X	J001884–00X
			Materials	–002 NICKEL PLATED STEEL AISI 1040 –008 316 SS WROUGHT TYPE – 2" ONLY ASTM A351 CF8M – OTHERS							
	14	1	SCREW SEAL Buna–N	J005526–222		J005526–234		J005526–224		J005526–226	– – –
	15	1	RELIEF FITTING Steel	J005197		J005197		J005197		J005197	– – –

* RECOMMENDED SPARE PARTS – ONE EACH FOR ONE YEAR'S SERVICE.

‡ AVAILABLE ONLY IN FLANGED END. REFER TO 2,000 3000 & 5000 VALVES FOR THREADED, WELD & GROOVED OPTIONS.

CAMERON

DEMCO

SERIES DM GATE VALVE - 4" CLASS 1500 FOR GENERAL SERVICE

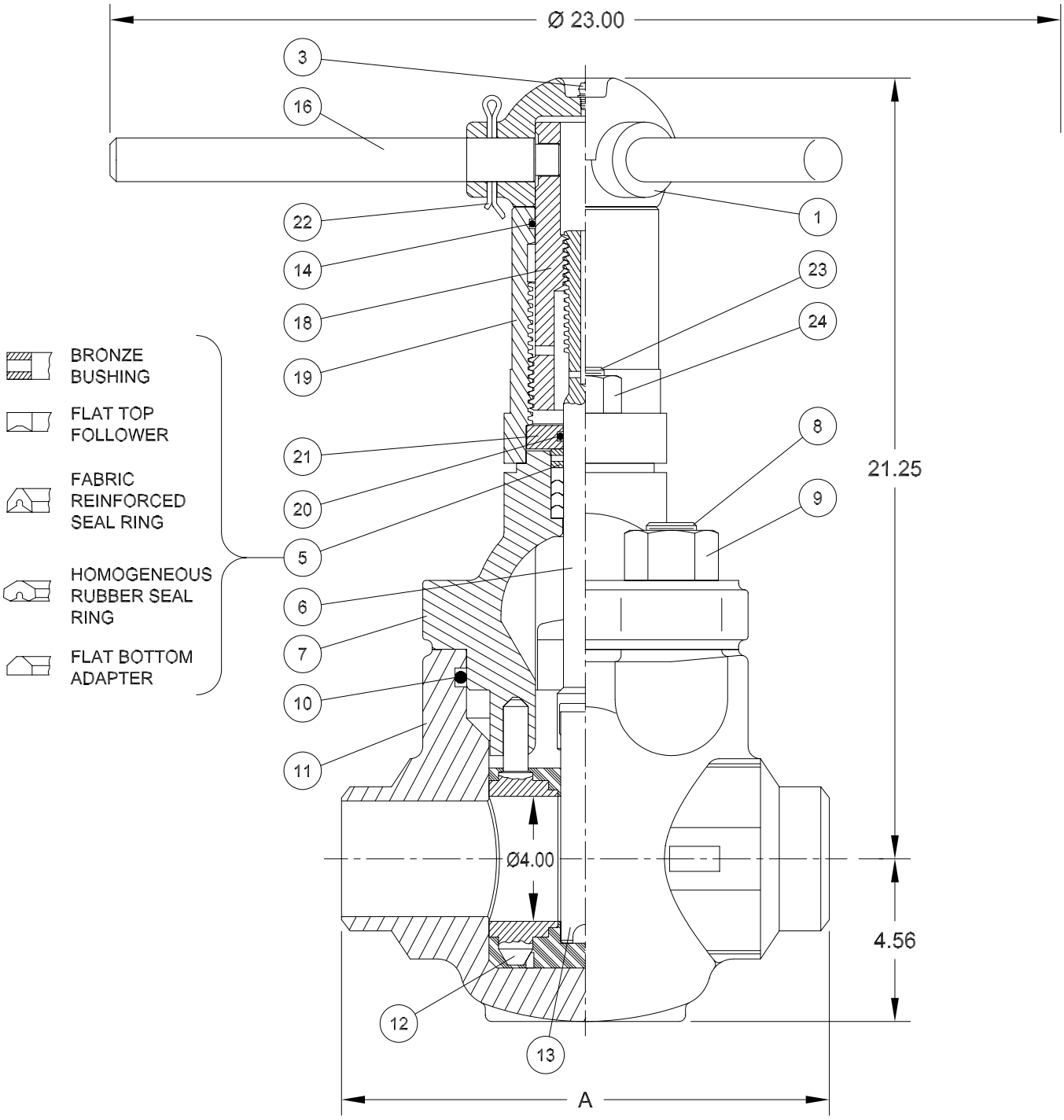

DIMENSIONAL DATA AND WEIGHTS

DIMENSION \ VALVE SIZE	4"
CLASS	1500
A – THREADED & WELD	13.00
– FLANGED – RF	21.50
– RTJ	21.62
F (FLANGE DIAMETER)	12.25
FLANGE BOLTS (QTY. – SIZE)	8 – 1-1/4
RING NUMBER (RTJ)	R-39
WEIGHT, LB – THREADED & WELD	162
– FLANGED	320

ASSEMBLY PART NUMBER

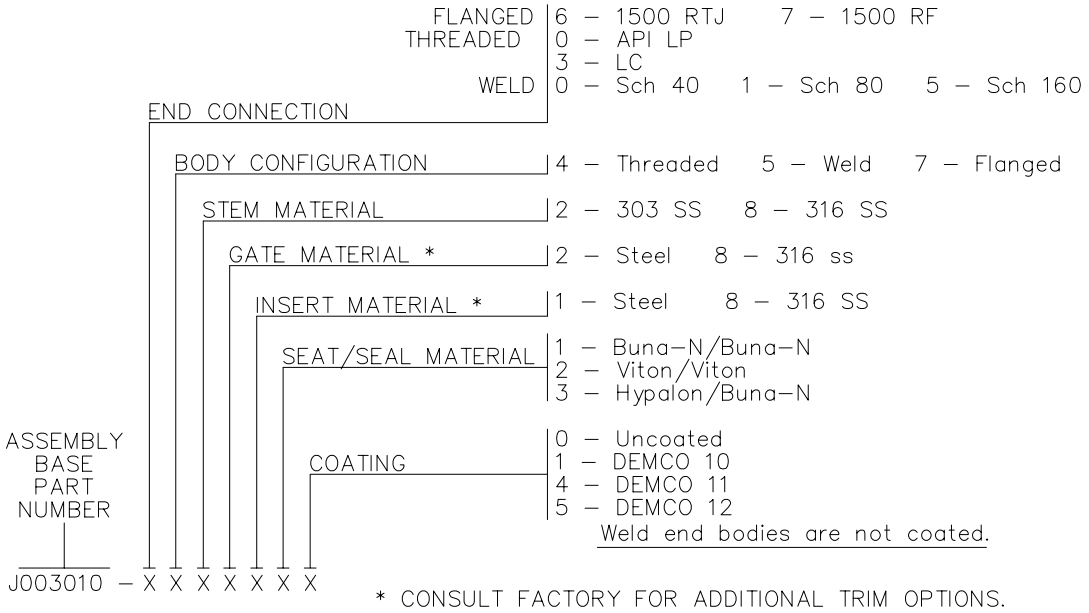

PARTS LIST

	INDEX	REQD.	DESCRIPTION / VALVE SIZE / CLASS	4" CLASS 1500
			ASSEMBLY BASE PART NUMBER	J003010
	1	1	HUB ASSEMBLY Ductile Iron ASTM A536 Grade 65–45–12	2139714–01
	3	1	LUBE FITTING Steel	J005195
*	5	1	STEM SEAL ASSEMBLY Buna–N	J001951–001
			Viton	J001951–006
	6	1	STEM 303 SS –002, 316 SS –008	J001933–XXX
	7	1	BONNET ASTM A487 Gr. 4 Class A or Gr. 2 Class B	J001977 XXX
			Coatings	Uncoated –030, DEMCO 10 –031 DEMCO 11 –034, DEMCO 12 –035
	8	4	BODY STUD ASTM A193 Grade B7	** J024500
	9	4	BODY STUD NUT ASTM A194 Grade 2H	** 2709000–12–01
*	10	1	BONNET SEAL Buna–N	J005526–439
			Viton	J005531–439
	11	1	BODY MATERIALS: ASTM A487 GRADE 4 CLASS A OR GRADE 2 CLASS B	CONSULT FACTORY FOR BODY PART NUMBERS
*	12	1	SEAT	J002207–0XX
			Materials	Inserts: – 02X Steel AISI 1040 – 08X 316 SS ASTM A351 Grade CF8M Annealed Elastomers: – 0X1 Buna–N – 0X2 Viton – 0X3 Hypalon
*	13	1	GATE	J001926–XXX
			Materials	–002 AISI 4140 Nickel Plated –008 ASTM A351 Grade CF8M
	14	1	SCREW SEAL Buna–N	J005526–227
	16	1	LOCK HANDLE AISI C1213	J001897
	18	1	STEM SCREW AISI C1213	J001915
	19	1	SCREW HOUSING AISI 1029	J001958
*	20	1	SECONDARY SEAL Buna–N	J005526–214
	21	1	RETAINER AISI C1213	J001942
	22	1	PIN, LOCK HANDLE Steel	J005420–18732
	23	2	BONNET STUD ASTM A193 Grade B7	J002072
	24	2	BODY STUD NUT ASTM A194 Grade 2H	2709000–09–01

* RECOMMENDED SPARE PARTS – ONE EACH FOR ONE YEAR'S SERVICE.
** VALVES MADE PRIOR TO 1994 MAY USE 7 PITCH STUD J002075 AND NUT J053251–042.

CAMERON

DEMCO
2" 7500 WP XXH DM GATE VALVES WITH 1.50" THRU BORE FOR GENERAL SERVICE

G-107
01-27-11
SHEET 1

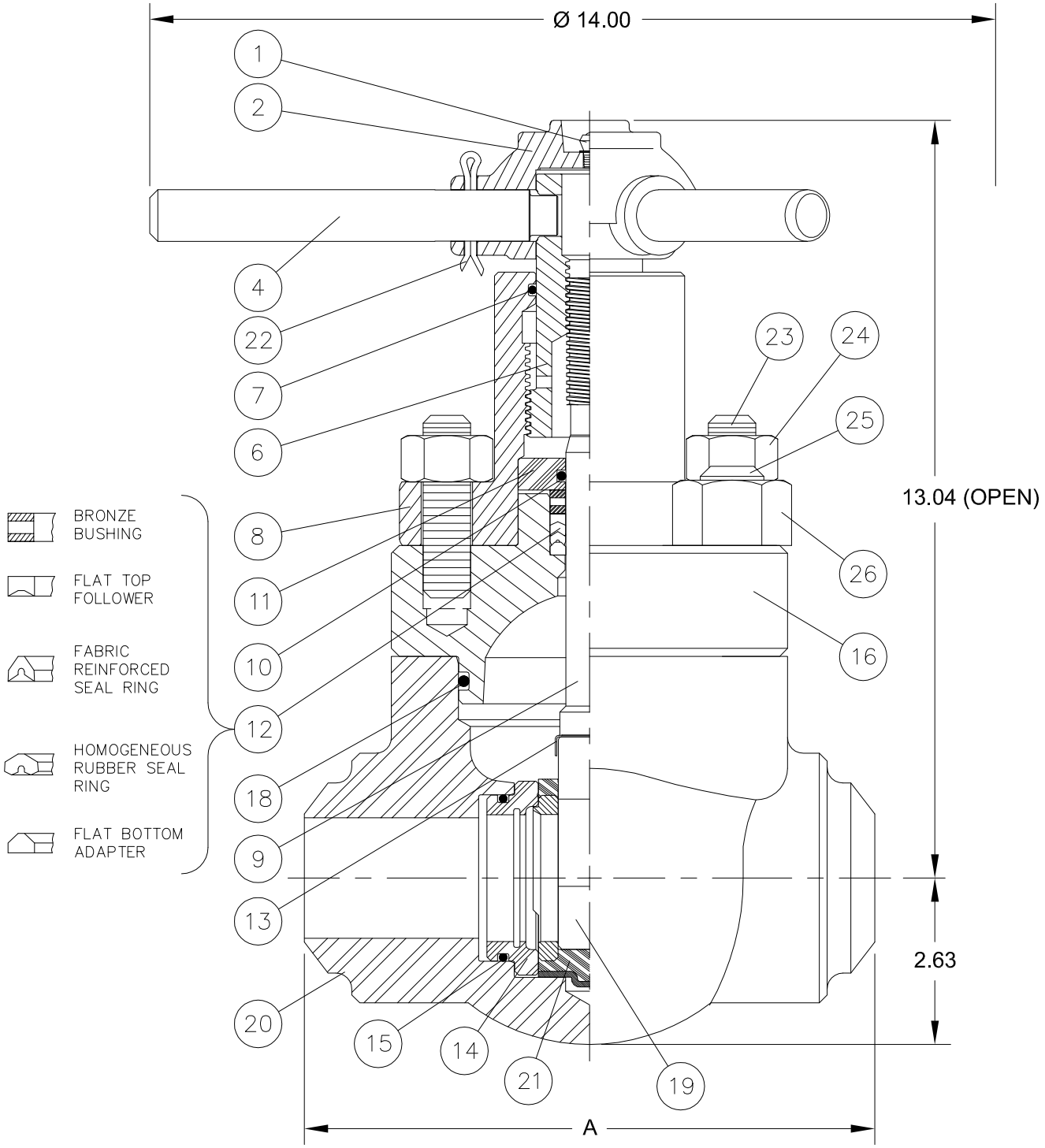

DATA

A – WELD END	9.00
VALVE SEAT I.D.	1.50
NUMBER OF HANDLE TURNS FROM OPEN TO CLOSED	7.00
WEIGHT – WELD END	76 LBS.

ASSEMBLY PART NUMBER

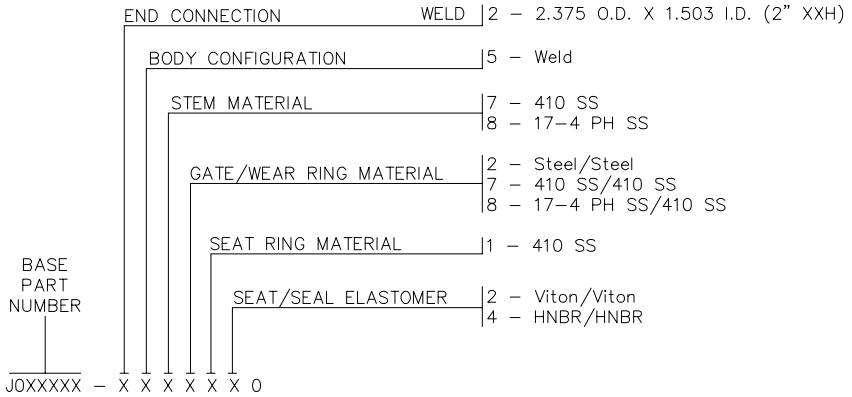

Group 1 – Basic valve. Designed in accordance with the methods in API 6A, 17th ed, par 4.3.3. Hydrostatic shell test: 11,250 psi for 3 min. Hydrostatic seat test : 7500 psi for 3 min, each side. Material traceability on body and bonnet.

Group 2 – Same as Group 1 except: Hydrostatic shell test: 11,250 psi for 3 min, drop to 0 psi, 11,250 psi for 15 min. Test is charted. Hydroststic seat test: 7500 psi for 3 min, drop to 0 psi, 7500 psi for 15 min, drop to 0 psi, 300 psi for 5 min, each side. Test is charted. Material traceability on body, bonnet, stem, gate and bolting. Impact tests at or below –50°F on body, bonnet, stem, housing (2" & 3"), packing retainer (4" & 5") and bolting. Surface NDE on body, bonnet and stem.

Group 3 – Same as Group 2 plus volumetric NDE on body and bonnet.

PARTS LIST

	INDEX	REQD	DESCRIPTION / GROUP NUMBER	GROUP 1	GROUP 2	GROUP 3
			ASSEMBLY BASE NUMBER — WELD END	J025196	J025197	
	1	1	LUBE FITTING — STEEL	J005195		
	2	1	HANDLE — DUCTILE IRON ASTM A536 GRADE 65–45–12	2139712–01		
	4	1	LOCK HANDLE — AISI C1213	J001891		
*	6	1	STEM SCREW — AISI C1213	J001913		
*	7	1	HOUSING SEAL — BUNA–N	J005526–224		
	8	1	SCREW HOUSING — ASTM A350 GRADE LF2 CLASS 1	J024982		
*	9	1	STEM – 410 SS	2269413–01		
*	10	1	SECONDARY SEAL – VITON	J005531–210		
			– HNBR	2712425–13		
	11	1	PACKING RETAINER — AISI C1213	J001940	– – –	
			17–4 PH SS	– – –	J021432	
*	12	1	STEM SEAL ASSEMBLY — VITON	J023231–006		
			(WITH BRONZE BUSHING – ASTM B505 ALLOY 93200) — HNBR	J023231–008		
	13	1	GATE CLIP — AISI 302 SS	M450480		
*	14	2	BODY WEAR RING – FOR STEEL GATE, AISI 4140 w/QPQ NITRIDE COATING	2269414–01		
*	15	2	WEAR RING SEAL – HNBR	2712425–18		
	16	1	BONNET — ASTM A487 GRADE 4 CLASS D	J024985–030	2140428–01	
*	18	1	BONNET SEAL – VITON	J005521–342		
			– HNBR	2712425–60		
*	19	1	GATE — STEEL AISI 4140 w/QPQ NITRIDE COATING	2269412–01		
	20	1	BODY MATERIALS: WELD END – ASTM A487 GRADE 4 CLASS D	CONSULT FACTORY FOR BODY PART NUMBERS		CONSULT FACTORY FOR PART NUMBERS
*	21	1	SEAT	2269403–01		
			410 SS/HNBR	RINGS: AISI 410 SS ELASTOMER: HNBR		
			410 SS/VITON	RINGS: AISI 410 SS ELASTOMER: VITON		
	22	1	COTTER PIN — STEEL	J005420–18728		
	23	2	HOUSING STUD	J002066	J021436	
			MATERIAL	ASTM A193 GRADE B7	ASTM A193 GRADE L7	
	24	2	HOUSING STUD NUT	2709000–08–01	J053252–034	
			MATERIAL	ASTM A194 GRADE 2H	ASTM A194 GRADE 7	
	25	4	BODY STUD	J015432	J021442	
			MATERIAL	ASTM A193 GRADE B7	ASTM A193 GRADE L7	
	26	4	BODY STUD NUT	2709000–10–01	J053252–038	
			MATERIAL	ASTM A194 GRADE 2H	ASTM A194 GRADE 7	

* Recommended spare parts for one year's service.
Consult factory for part numbers not shown.

SERIES DM GATE VALVE MAINTENANCE INSTRUCTIONS
2000-3000-5000 2" FULL PORT & 2-1/2" REGULAR PORT

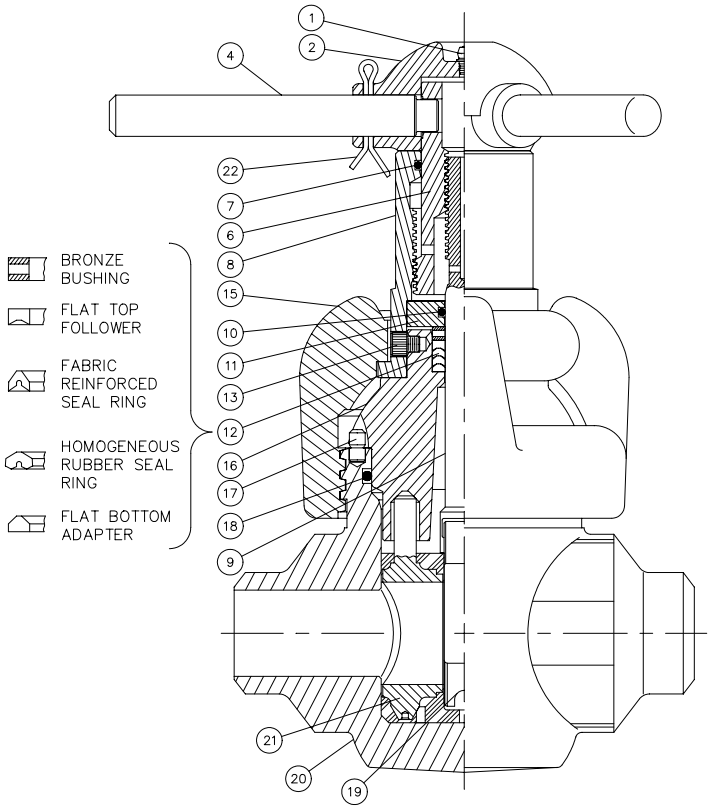

DISASSEMBLY

1. Fully open the gate valve. Unscrew coupling (15) and withdraw the bonnet assembly from the body. Collapse the seat (21) by compressing the top pins together and remove it from the body.

2. With the bonnet assembly on its side, remove pin (22) and lock handle (4) then lift off hub (2). Remove coupling (15). Turn stem screw (6) clockwise to bottom, then withdraw gate (19) from stem (9) by rotating a quarter turn and sliding it off the tee-head of the stem.

3. Seat or gate replacement may be made at this point. To reassemble the valve, proceed from reassembly instruction 3 after following the applicable maintenance instructions. If it is desired to inspect other parts, the following instructions apply.

4. Turn the stem clockwise until it disengages from stem screw (6) and withdraw it from the underside of the bonnet. Unscrew the lock screw (13) and lift screw housing (8) off the bonnet. Remove retainer (11), o-ring seal (10) and stem seal assembly (12) from the bonnet. Turn stem screw (6) clockwise out of the screw housing. Remove screw seal (7) from the screw housing and bonnet seal (18) from the valve body.

MAINTENANCE

Thoroughly clean all parts and inspect them for wear or damage. It is recommended that seals (7), (10), (18) and stem seal assembly (12) be replaced if they are worn or cut. All sealing surfaces should be clean and free of dirt, rust, nicks and scratches. These will include the areas inside the body adjacent to the line bore where the seat fits, the area around the lower part of the bonnet that lies against the bonnet o-ring seal, the bonnet stuffing box and the surface of the stem that passes through the packing. Clean these surfaces well and polish with emery cloth if necessary, paying particular attention to the valve stem. Before reassembling, apply a good grade of general purpose grease to all threads, seal rings and exterior of the seat and on the surfaces of the bonnet, stem and stem screw which are in contact with seals.

REASSEMBLY

1. Slide the threaded end of the stem through the bonnet bore from the underside and place the stem seal assembly over the stem. This assembly consists of a flat bottomed adapter ring, homogeneous rubber seal ring, fabric reinforced seal ring, a flat topped follower ring and a bushing, which are placed over the end of the stem in that order. The lips on "V" rings point towards bottom of bonnet. Slide the retainer (11) with o-ring seal (10) inside over the stem. Seat the stem seal assembly into its counterbore in the bonnet.

2. Engage the stem screw (6) in the screw housing (8) about half its total travel and place the screw housing on the bonnet and stem. Replace lock screw (13). Place the coupling on the screw housing.

3. Rotate the stem screw clockwise until it bottoms on the retainer, then back it up approximately one-eighth turn. Engage the gate on the tee-head of the stem and turn them together counterclockwise until the gate touches the underside of the bonnet lugs. Align the gate with the opening between the lugs and retract it into the bonnet by turning the stem screw counterclockwise. Place the hub on the stem screw, insert the lock handle and retain it with the cotter pin. Do not spread the pin since it may be removed later while adjusting the gate level.

4. Install the seat on the bonnet and stand the assembly upright resting on the seat. Turn the handle clockwise until the hub is stopped by the top of the screw housing.

Make a pencil mark on one side of the gate even with the bottom of the seat port. Raise the bottom of the gate into the seat bore by rotating the handle and measure the distance from the pencil mark to the bottom of the gate. This distance must be between 5/16" - 7/16". If the distance is correct, proceed to assembly step 5. If not, remove the seat, lock handle and hub from the assembly. Rotate the stem screw clockwise to bottom then back off one-eighth turn. Turn the gate and stem together while holding the stem screw: counterclockwise to reduce the distance or clockwise to increase the distance as required. One-half turn of the gate and stem changes the distance approximately 1/16". Repeat step 4 until the closed gate position is correct.

5. Replace bonnet seal (18). Assemble seat (21) and bonnet to the valve body keeping the seat ports aligned with the body line bore, making sure the gate is in the slot in the seat and that the top pins of the seat are in the drilled holes in the bonnet while performing this operation. Tighten the coupling. Spread the cotter pin (22) in the lock handle and repack the hub with general-purpose grease through fitting (1). This is most effectively done when the valve is closed.

TROUBLE SHOOTING

DIFFICULTY OF OPERATION may be due to the following:

a) Sand or other foreign material packed in the bonnet. Remove bonnet and clean out.
b) Dry threads. Lubricate through the lube fitting. This is most effectively done when the valve is closed.
c) Stem threads galled. Replace stem and/or stem screw.

LEAKAGE THROUGH THE VALVE may be due to the following:

a) Washed out gate or seat. Replace damaged parts.
b) Improper closed gate position. Set gate as instructed above in the reassembly instructions.

LEAKAGE AROUND THE STEM is caused by a damaged stem seal assembly or stem. Replace stem seal assembly and inspect stem for wear.

LEAKAGE BETWEEN BODY AND BONNET is caused by a damaged bonnet seal which must be replaced.

SERIES DM GATE VALVE MAINTENANCE INSTRUCTIONS
2000-3000 WP 2-1/2", 3", 4" FULL PORT - 4", 5" REGULAR PORT
5000 WP - 3" FULL PORT, 4" REGULAR PORT
CLASS 1500 - 4" FULL PORT

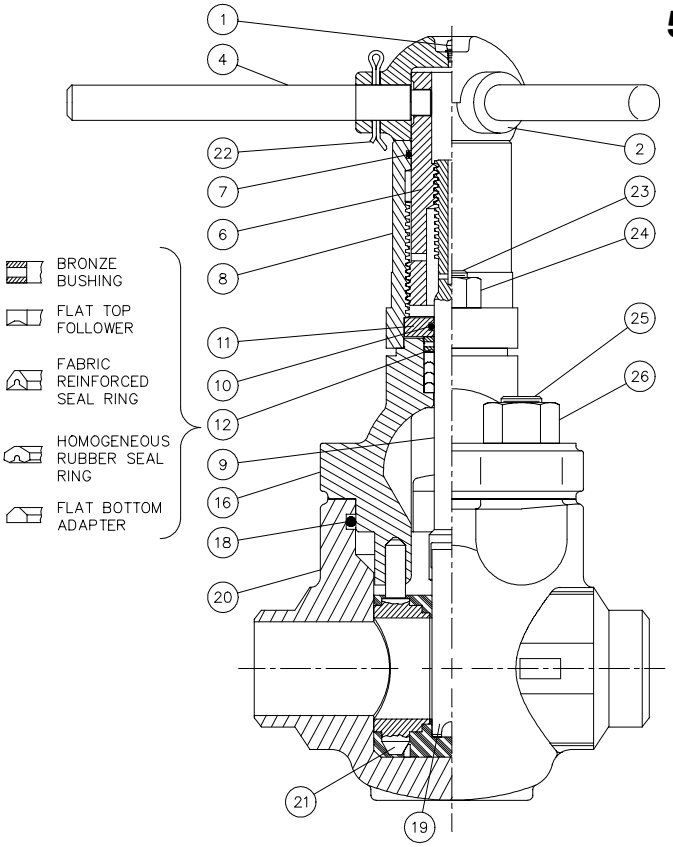

DISASSEMBLY

1. Fully open the gate valve. Remove nuts (26) and withdraw the bonnet assembly from the body. Collapse the seat (21) by compressing the top pins together and remove it from the body.

2. With the bonnet assembly on its side, remove pin (22) and lock handle (4) then lift off hub (2). Turn stem screw (6) clockwise to bottom, then withdraw gate (19) from stem (9) by rotating a quarter turn and sliding it off the tee-head of the stem.

3. Seat or gate replacement may be made at this point. To reassemble the valve, proceed from reassembly instruction 3 after following the applicable maintenance instructions. If it is desired to inspect other parts, the following instructions apply.

4. Turn the stem clockwise until it disengages from stem screw (6) and withdraw it from the underside of the bonnet. Unscrew the two nuts (24) and lift screw housing (8) off the bonnet. Remove retainer (11), o-ring seal (10) and stem seal assembly (12) from the bonnet. Turn stem screw (6) clockwise out of the screw housing. Remove screw seal (7) from the screw housing and bonnet seal (18) from the valve body.

MAINTENANCE

Thoroughly clean all parts and inspect them for wear or damage. It is recommended that seals (7), (10), (18) and stem seal assembly (12) be replaced if they are worn or cut. All sealing surfaces should be clean and free of dirt, rust, nicks and scratches. These will include the areas inside the body adjacent to the line bore where the seat fits, the area around the lower part of the bonnet that lies against the bonnet o-ring seal, the bonnet stuffing box and the surface of the stem that passes through the packing. Clean these surfaces well and polish with emery cloth if necessary, paying particular attention to the valve stem. Before reassembling, apply a good grade of general purpose grease to all threads, seal rings and exterior of the seat and on the surfaces of the bonnet, stem and stem screw which are in contact with seals.

REASSEMBLY

1. Slide the threaded end of the stem through the bonnet bore from the underside and place the stem seal assembly over the stem. This assembly consists of a flat bottomed adapter ring, homogeneous rubber seal ring, fabric reinforced seal ring, a flat-topped follower ring and a bushing, which are placed over the end of the stem in that order. The lips on "V" rings point towards bottom of bonnet. Slide the retainer (11) with o-ring seal (10) inside over the stem. Seat the stem seal assembly into its counterbore in the bonnet.

2. Engage the stem screw (6) in the screw housing (8) about half its total travel and place the screw housing on the bonnet and stem. Replace nuts (24).

3. Rotate the stem screw clockwise until it bottoms on the retainer, then back it up approximately one-eighth turn. Engage the gate on the tee-head of the stem and turn them together counterclockwise until the gate touches the underside of the bonnet lugs. Align the gate with the opening between the lugs and retract it into the bonnet by turning the stem screw counterclockwise. Place the hub on the stem screw, insert the lock handle and retain it with the cotter pin. Do not spread the pin since it may be removed later while adjusting the gate level.

4. Install the seat on the bonnet and stand the assembly upright resting on the seat. Turn the handle clockwise until the hub is stopped by the top of the screw housing.

Make a pencil mark on one side of the gate even with the bottom of the seat port. Raise the bottom of the gate into the seat bore by rotating the handle and measure the distance from the pencil mark to the bottom of the gate. This distance must be within the following limits for each size valve:2-1/2" and 3" full port and 4" regular port - 3/8" to 1/2"; 4" full port and 5" regular port - 7/16" to 9/16".

If the distance is correct, proceed to assembly step 5. If not, remove the seat, lock handle and hub from the assembly. Rotate the stem screw clockwise to bottom then back off one-eighth turn. Turn the gate and stem together while holding the stem screw: counterclockwise to reduce the distance or clockwise to increase the distance as required. One-half turn of the gate and stem changes the distance approximately 1/16". Repeat step 4 until the closed gate position is correct.

5. Replace bonnet seal (18). Assemble seat (21) and bonnet to the valve body keeping the seat ports aligned with the body line bore, making sure the gate is in the slot in the seat and that the top pins of the seat are in the drilled holes in the bonnet while performing this operation. Replace and tighten nuts (26). Spread the cotter pin (22) in the lock handle and repack the hub with general-purpose grease through fitting (1).This is most effectively done when the valve is closed.

TROUBLE SHOOTING

DIFFICULTY OF OPERATION may be due to the following:

a) Sand or other foreign material packed in the bonnet. Remove bonnet and clean out.
b) Dry threads. Lubricate through the lube fitting. This is most effectively done when the valve is closed
c) Stem threads galled. Replace stem and/or stem screw.

LEAKAGE THROUGH THE VALVE may be due to the following:

a) Washed out gate or seat. Replace damaged parts.
b) Improper closed gate position. Set gate as instructed above in the reassembly instructions.

LEAKAGE AROUND THE STEM is caused by a damaged stem seal assembly or stem. Replace stem seal assembly and inspect stem for wear.

LEAKAGE BETWEEN BODY AND BONNET is caused by a damaged bonnet seal which must be replaced.

SERIES DM GATE VALVE MAINTENANCE INSTRUCTIONS
5000 WP 4" FULL PORT, 5" & 6" REGULAR PORT

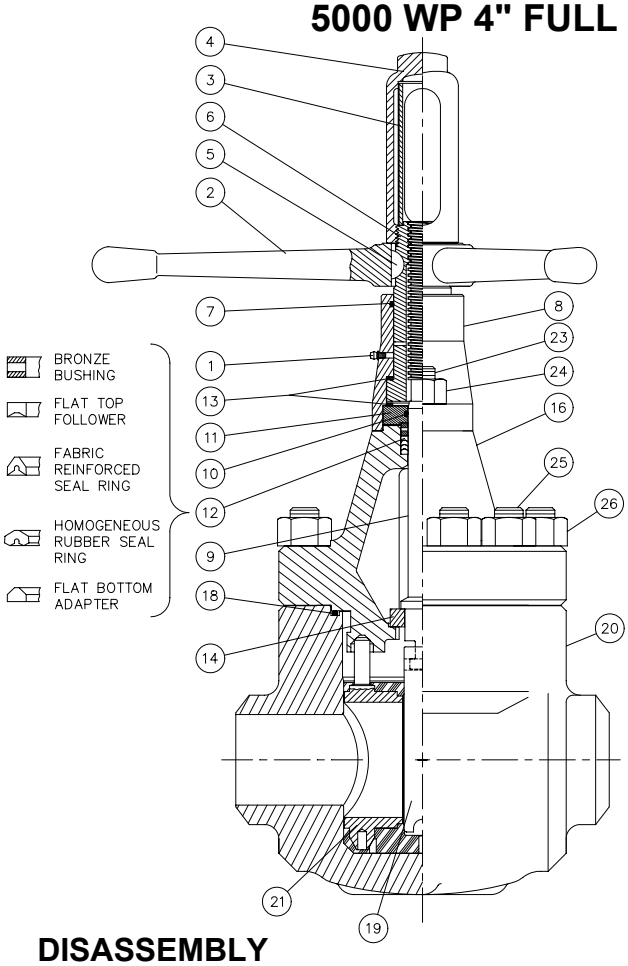

DISASSEMBLY

1. Fully open the gate valve. Remove nuts (26) and withdraw the bonnet assembly from the body. Collapse the seat (21) by compressing the top pins together and remove it from the body.

2. With the bonnet assembly on its side, turn the handle (2) clockwise to move the gate (19) out of the bonnet. Withdraw the gate (19) from the stem (9) by rotating a quarter turn and sliding it off the tee-head of the stem.

3. Seat or gate replacement may be made at this point. To reassemble the valve, proceed from reassembly instruction 4 after following the applicable maintenance instructions. If it is desired to inspect other parts, the following instructions apply.

4. Remove stem cap (4), tube (3), handle (2) and key (5). Remove nuts (24) and lift off the screw housing (8). Rotate the stem screw (6) clockwise off the stem and remove bearings (13) and retainer (11). Lift the stem part way so that the down stop ring (14) may be removed, then withdraw the stem from the underside of the bonnet. The stem seal assembly (12), including the bushing, may now be removed.

MAINTENANCE

Thoroughly clean all parts and inspect them for wear or damage. It is recommended that seals (7), (10), (18) and stem seal assembly (12) be replaced if they are worn or cut. All sealing surfaces should be clean and free of dirt, rust, nicks and scratches. These will include the areas inside the body adjacent to the line bore where the seat fits, the area around the lower part of the bonnet that lies against the bonnet o-ring seal, the bonnet stuffing box and the surface of the stem that passes through the packing. Clean these surfaces well and polish with emery cloth if necessary, paying particular attention to the valve stem. Also clean and polish the surfaces of the stem screw that run against the bearings. Before reassembling, apply a good grade of general purpose grease to all threads, bearings, seal rings and exterior of the seat and on the surfaces of the bonnet, stem and stem screw which are in contact with seals.

REASSEMBLY

1. Slide the threaded end of the stem (9) through the bonnet bore from the underside and draw the stem head part way up into the bonnet (16). Put the down stop ring (14) on over the bottom of the stem head, lower the stem so that the down stop ring shoulders on the inside of the bonnet.

2. Place the stem seal assembly (12) over the stem. This assembly consists of a flat bottomed adapter ring, homogeneous rubber seal ring, fabric reinforced seal ring, a flat topped follower ring and a bushing which are placed over the end of the stem in that order. The lips on "V" rings point towards bottom of bonnet. Work the seal and follower rings carefully down over the stem thread, lips first, and into the stuffing box, being careful that the lips of the rings do not get curled back. After the bushing, put the retainer (11), with o-ring inside, down over the stem with flat side up.

3. Follow the retainer with a bearing (13) and the stem screw (6). The bearing must be concentric with the stem screw before further assembly. Place another bearing down over the stem screw and follow with the screw housing (8), with o-ring seal (7) inside, and tighten nuts (24). Put the key (5) into its slot in the stem screw and replace the handle (2), tube (3) and stem cap (4) in that order.

4. Slide the gate (19) into the stem, turn it a quarter turn to line it up with the slot in the bonnet and draw it up all the way into the bonnet by turning the handle counterclockwise. Replace bonnet seal (18).

Assemble seat (21) and bonnet to the valve body keeping the seat ports aligned with the body line bore, making sure the gate is in the slot in the seat and that the top pins on the seat are in the drilled holes in the bonnet while performing this operation. Tighten nuts (26) and repack the screw housing (8) with general-purpose grease through fitting (1).

TROUBLE SHOOTING

DIFFICULTY OF OPERATION may be due to the following:

a) Sand or other foreign material packed in the bonnet. Remove bonnet and clean out.
b) Dry stem threads. Lubricate through the lube fitting.
c) Stem threads galled. Replace stem and/or stem screw.
d) Bearings worn out. Replace

LEAKAGE THROUGH THE VALVE may be due to a washed out gate or seat. Replace.

LEAKAGE AROUND THE STEM is caused by a damaged stem seal assembly or stem. Replace stem seal assembly and inspect stem for wear.

LEAKAGE BETWEEN BODY AND BONNET is caused by a damaged bonnet seal which must be replaced.

CAMERON

DEMCO
2000, 3000, 5000 WP DM GATE VALVES
2" FULL PORT & 2-1/2" REGULAR PORT
FOR GENERAL SERVICE

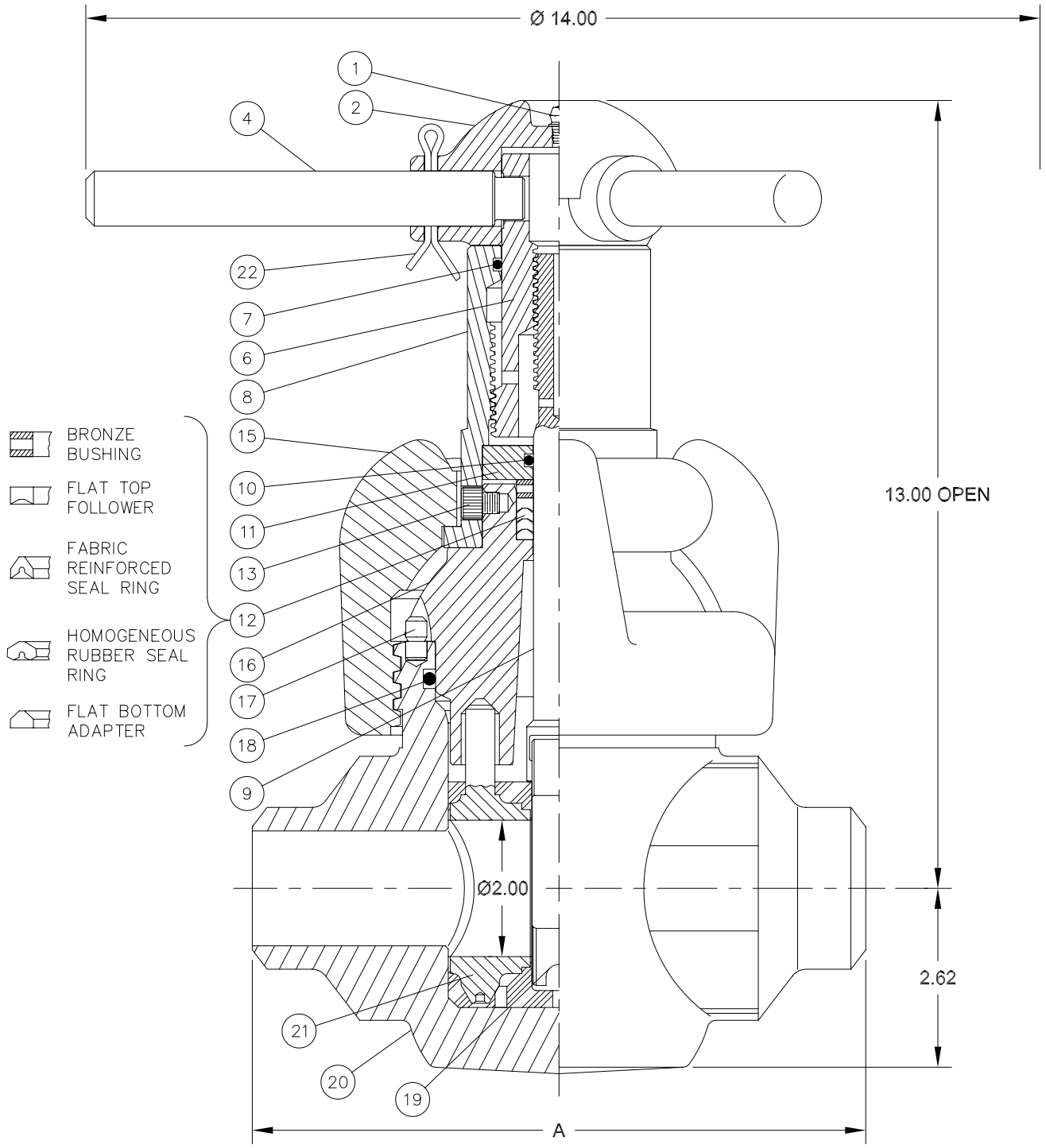

DIMENSIONAL DATA AND WEIGHTS

RATING	2000 WP – 4000 TEST		3000 WP – 6000 TEST		5000 WP – 7500 TEST	
DIMENSION / SIZE	2" F.P.	2–1/2" R.P.	2" F.P.	2–1/2" R.P.	2" F.P.	2–1/2" R.P.
A – THREADED, WELD & GROOVED	9.00	9.00	9.00	9.00	9.00	9.00
– RTJ	11.62	---	11.62	---	12.12	---
FLANGE O.D.	6.50	---	8.50	---	8.50	---
FLANGE BOLTS (NUMBER – SIZE)	8 – 5/8 DIA.	---	8 – 7/8 DIA.	---	8 – 7/8 DIA.	---
RING NO. (RTJ)	R–23	---	R–24	---	R–24	---
WEIGHT (LB.) – THREADED, WELD, GROOVED	56		58		58	
– FLANGED	70		100		110	

ASSEMBLY PART NUMBER

END CONNECTION

FLANGED	0 – 2000 RTJ 1 – 3000 RTJ 2 – 5000 RTJ
THREADED	0 – LP 2 – EU
GROOVED	0 – SCH 80
WELD	0 – SCH 40 1 – SCH 80 2 – XXH 5 – SCH 160

PIPE SIZE	STANDARD WELD END SUFFIXES 2000 PSI	3000 PSI	5000 PSI
2"	0 & 1	1 & 5	1, 2 & 5
2–1/2"	0 & 1	1 & 5	1, 2 & 5

BODY CONFIGURATION — 4 – Threaded 5 – Weld 6 – Grooved (2000 only) 7 – Flanged

STEM MATERIAL — 2 – 303 SS 8 – 316 SS

GATE MATERIAL* — 2 – Steel 8 – 316 SS

INSERT MATERIAL* — 1 – Ductile Iron 8 – 316 SS

SEAT/SEAL ELASTOMER — 1 – Buna–N/Buna–N; 2 – Viton/Viton; 3 – Hypalon/Buna–N

COATING — 0 – Uncoated 1 – DEMCO 10; 4 – DEMCO 11 5 – DEMCO 12; WELD END BODIES ARE NOT COATED

BASE PART NUMBER

XXXXXXX– X X X X X X X

* Consult factory for other trim options.

PARTS LIST

INDEX	REQD.	DESCRIPTION / SIZE/RATING	2" FULL PORT & 2–1/2" REGULAR PORT 2000 WP	3000 WP	5000 WP
		ASSEMBLY BASE NUMBER –2" FULL PORT – THREADED	J001026	J001027	J001028
		– WELD	J001029	J001030	J001031
		– GROOVED	J011920	---	---
		– FLANGED	J001023	J001024	J001025
		– 2–1/2" REGULAR PORT – WELD	J001115	J001114	J001109
1	1	LUBE FITTING — Steel	J005195	J005195	J005195
2	1	HANDLE — ASTM A536 Ductile Iron	2139712–01	2139712–01	2139712–01
4	1	LOCK HANDLE — C–1213	J001891	J001891	J001891
6	1	STEM SCREW — C–1213	J001913	J001913	J001913
7	1	STEM SCREW SEAL — Buna–N	J005526–224	J005526–224	J005526–224
8	1	SCREW HOUSING — C–1018	J001848	J001848	J001848
9	1	STEM — 303 SS –002, 316 SS –008	J001931–XXX	J001931–XXX	J001931–XXX
10	1	SECONDARY SEAL — Buna–N	J005526–210	J005526–210	J005526–210
11	1	RETAINER — C–1213	J001940	J001940	J001940
* 12	1	STEM SEAL ASSEMBLY — Buna–N –001, Viton –006	J001949–XXX	J001949–XXX	J001949–XXX
13	1	LOCK SCREW — Steel	J005665–22004	J005665–22004	J005665–22004
15	1	COUPLING — A216 Steel –020, A487 Steel –030	J001446–020	J001446–020	J001445–030
16	1	BONNET — ASTM A105	J001237–XXX	J001237–XXX	J001237–XXX
		Coatings	Uncoated –020, DEMCO 10 –021 DEMCO 11 –024, DEMCO 12 –025		
17	1	INDEX PIN — Steel	J001981	J001981	J001981
* 18	1	BONNET SEAL — Buna–N	J005526–342	J005526–342	J005526–342
		Viton	J005531–342	J005531–342	J005531–342
* 19	1	GATE	J001887–XXX	J001887–XXX	J001887–XXX
		Materials	AISI 4140 NICKEL PLATED –002 Cast SS ASTM A351 Grade CF8M –008		
20	1	BODY MATERIALS: THREADED, WELD AND GROOVED – ASTM A105 NORMALIZED; 2000 FLANGED – FABRICATED FROM WELD BODY AND COMMERCIAL FLANGES; 3000 FLANGED – ASTM A216 GRADE WCB; 5000 FLANGED – ASTM A487 GRADE 4A OR 2B; COATINGS (EXCEPT WELD END BODIES): DEMCO 10, DEMCO 11, DEMCO 12	CONSULT FACTORY FOR BODY PART NUMBERS		
* 21	1	SEAT ASSEMBLY	J001876–0XX	J001876–0XX	J001876–0XX
		Materials	INSERTS: –01X DUCTILE IRON ASTM A395 OR STEEL AISI C1040; –08X 316 SS ASTM A351 GRADE CF8M ANNEALED; ELASTOMERS: –0X1 BUNA–N, –0X2 VITON, –0X3 HYPALON		
22	1	PIN – LOCK HANDLE — Steel	J005420–18728	J005420–18728	J005420–18728

* RECOMMENDED SPARE PARTS – ONE EACH FOR ONE YEAR'S SERVICE

DEMCO

2000, 3000, 5000 WP DM GATE VALVES
2-1/2" & 3" FULL PORT & 4" REGULAR PORT
FOR GENERAL SERVICE

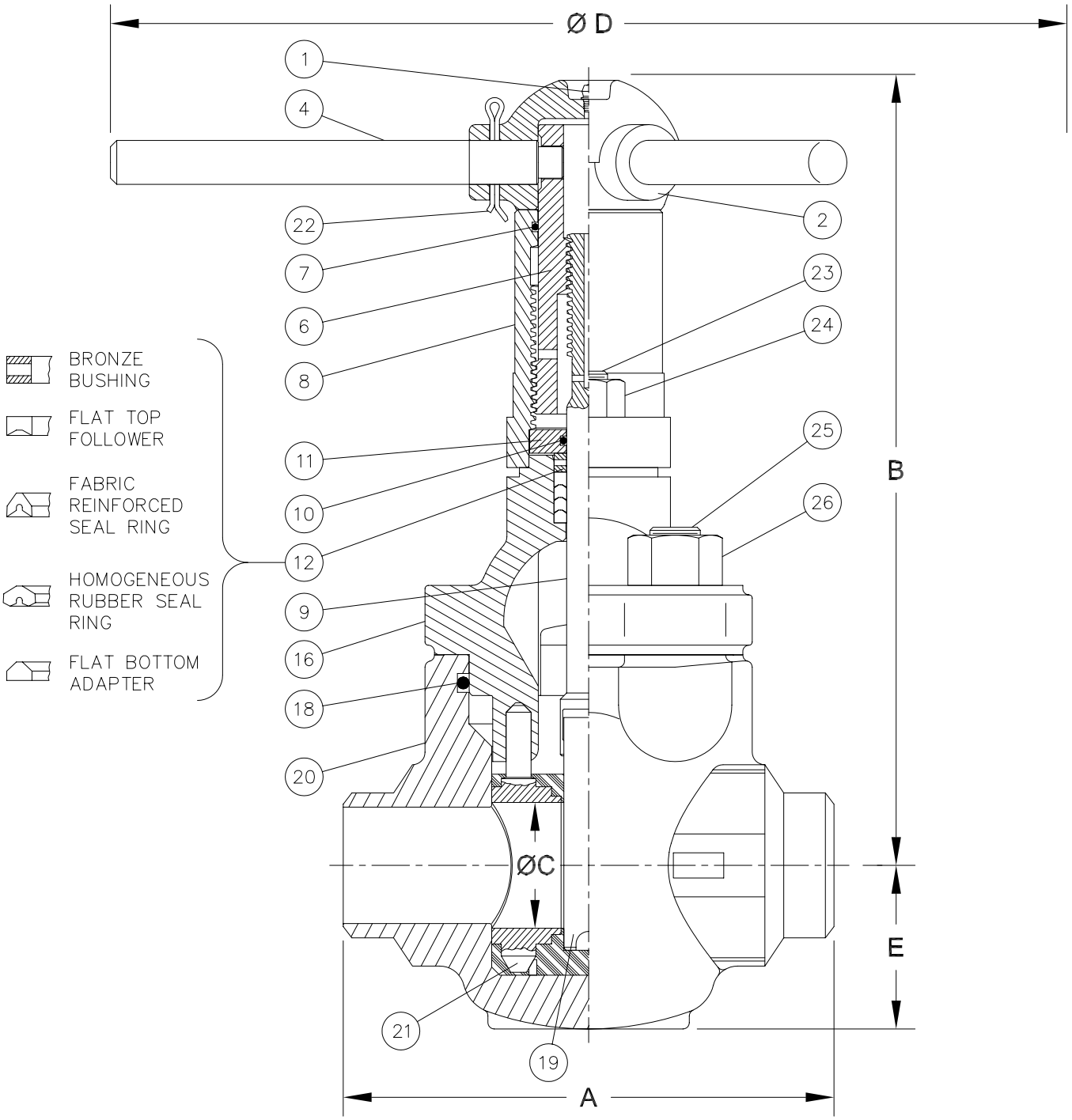

DIMENSIONAL DATA AND WEIGHTS

RATING	2000 WP – 4000 TEST		3000 WP – 6000 TEST			5000 WP – 7500 TEST	
DESCRIPTION / SIZE	2–1/2"	3"	2–1/2"	3"	4 X 3	3"	4 X 3
A – THREADED, WELD & GROOVED	9.75	11.00	9.75	11.00	11.00	11.00	11.00
– RTJ	16.62	14.12	16.62	14.12	---	15.62	---
B (OPEN)	17.00	18.00	17.00	18.00	18.00	18.00	18.00
C (SEAT BORE)	2.50	3.00	2.50	3.00	3.00	3.00	3.00
D	19.00	19.00	19.00	19.00	19.00	19.00	19.00
E – THREADED, WELD & GROOVED	3.12	3.50	3.25	3.69	3.69	3.94	3.94
– RTJ	3.19	3.50	3.19	3.69	---	3.94	---
FLANGE O.D.	7.50	8.25	9.62	9.50	---	10.50	---
FLANGE BOLTS (NUMBER – SIZE)	8 – 3/4 DIA.	8 – 3/4 DIA.	8 – 1 DIA.	8 – 7/8 DIA.	---	8 – 1-1/8 DIA.	---
RING NUMBER (RTJ)	R26	R31	R27	R31	---	R35	---
WEIGHT (LB.) – THREADED, WELD & GROOVED	74	95	87	113	113	140	140
– FLANGED	141	131	170	175	---	241	---

ASSEMBLY PART NUMBER

END CONNECTION

FLANGED: 0 – 2000 RTJ 1 – 3000 RTJ 2 – 5000 RTJ
THREADED: 0 – LP
1 – NU (3" Full port only)
2 – EU (2–1/2" Full port only)
GROOVED: 0 – SCH 80 (2000 only)
WELD: 0 – SCH 40 1 – SCH 80 2 – XXH 5 – SCH 160

PIPE SIZE	STANDARD WELD END SUFFIXES 2000 PSI	3000 PSI	5000 PSI
2–1/2"	0 & 1	1 & 5	– – –
3"	0 & 1	1 & 5	1, 2 & 5
4"	0 & 1	1 & 5	1, 2 & 5

BODY CONFIGURATION: 4 – Threaded 5 – Weld 6 – Grooved (2000 only) 7 – Flanged

STEM MATERIAL: 2 – 303 SS 8 – 316 SS

GATE MATERIAL*: 2 – Steel 8 – 316 SS

INSERT MATERIAL*: 1 – Ductile Iron or Steel
8 – 316 SS

SEAT/SEAL ELASTOMER: 1 – Buna–N/Buna–N
2 – Viton/Viton
3 – Hypalon/Buna–N

COATING: 0 – Uncoated 1 – DEMCO 10
4 – DEMCO 11 5 – DEMCO 12
WELD END BODIES ARE NOT COATED

BASE PART NUMBER

XXXXXXX– X X X X X X X

* Consult factory for additional trim options.

PARTS LIST

	INDEX	REQD.	DESCRIPTION / SIZE/RATING	2–1/2" FULL PORT 2000 WP	2000 WP	3000 WP	3" FULL PORT & 4" REG. PORT 2000 WP	3000 WP	5000 WP
			ASSEMBLY – 2–1/2", 3", 4" FULL PORT – THREADED	J001042	---	J001043	J001045	J001046	J001047
			– WELD	J001051	---	J001052	J001054	J001055	J001056
			– GROOVED	J011921	---	---	J011922	---	---
			– FLANGED	---	J001033	J001034	J001036	J001037	J001038
			– 4" REGULAR PORT – WELD	---	---	---	---	J001113	J001110
	1	1	LUBE FITTING Steel	J005195	J005195	J005195	J005195	J005195	J005195
	2	1	HUB ASSEMBLY ASTM A536 Ductile Iron	2139713–01	2139713–01	2139713–01	2139713–01	2139713–01	2139713–01
	4	1	LOCK HANDLE AISI C1213	J001892	J001892	J001892	J001892	J001892	J001892
	6	1	STEM SCREW AISI C1213	J001914–002	J001914–002	J001914–002	J001914–003	J001914–003	J001914–003
	7	1	STEM SCREW SEAL Buna–N	J005526–226	J005526–226	J005526–226	J005526–226	J005526–226	J005526–226
	8	1	SCREW HOUSING Carbon Steel	J001852	J001852	J001852	J001852	J001852	J001852
	9	1	STEM 303 SS –002, 316 SS –008	J001932–XXX	J001932–XXX	J001932–XXX	J001932–XXX	J001932–XXX	J001932–XXX
	10	1	SECONDARY SEAL Buna–N	J005526–212	J005526–212	J005526–212	J005526–212	J005526–212	J005526–212
	11	1	RETAINER AISI C1213	J001941	J001941	J001941	J001941	J001941	J001941
*	12	1	STEM SEAL ASSEMBLY Buna–N –001, Viton –006	J001950–XXX	J001950–XXX	J001950–XXX	J001950–XXX	J001950–XXX	J001950–XXX
	16	1	BONNET Cast Steel ASTM A487 4A or 2B	J001970–XXX	J001974–XXX	J001974–XXX	J001971–XXX	J001976–XXX	J001980–XXX
			Coatings	Uncoated –030, DEMCO 10 –031, DEMCO 11 –034, DEMCO 12 –035					
*	18	1	BONNET SEAL Buna–N	J005526–427	J005526–427	J005526–427	J005526–431	J005526–433	J005526–433
			Viton	J005531–427	J005531–427	J005531–427	J005531–431	J005531–433	J005531–433
*	19	1	GATE	J001868–00X	J001868–00X	J001868–00X	J001886–00X	J001886–00X	J001886–00X
			Materials	AISI 4140 NICKEL PLATED –002 Cast SS ASTM A351 Grade CF8M –008					
	20	1	BODY MATERIALS: ASTM A487 GRADE 4 CLASS A OR GRADE 2 CLASS B COATINGS (EXCEPT WELD END BODIES): DEMCO 10, DEMCO 11, DEMCO 12	CONSULT FACTORY FOR BODY PART NUMBERS					
*	21	1	SEAT ASSEMBLY	J001877–0XX	J001877–0XX	J001877–0XX	J001878–0XX	J001878–0XX	J001878–0XX
			Materials	INSERTS: –001 Ductile Iron ASTM A395 or Steel AISI C1040 –008 316 SS ASTM A351 Grade CF8M Annealed ELASTOMERS: –0X1 Buna–N –0X2 Viton –0X3 Hypalon					
	22	1	PIN, LOCK HANDLE Steel	J005420–18732	J005420–18732	J005420–18732	J005420–18732	J005420–18732	J005420–18732
	23	2	BONNET STUD ASTM A193 Grade B7	J002066	J002066	J002066	J002066	J002066	J002066
	24	2	BONNET STUD NUT ASTM A194 Grade 2H	2709000–08–01	2709000–08–01	2709000–08–01	2709000–08–01	2709000–08–01	2709000–08–01
	25	4	BODY STUD ASTM A193 Grade B7	J002072	J002074	J002074	J002072	J002074	J002076
	26	4	BODY STUD NUT ASTM A194 Grade 2H	2709000–09–01	2709000–10–01	2709000–10–01	2709000–09–01	2709000–10–01	2709000–13–01

* RECOMMENDED SPARE PARTS – ONE EACH FOR ONE YEAR'S SERVICE

CAMERON

DEMCO

2000, 3000, WP DM GATE VALVES
4" FULL PORT & 5" REGULAR PORT
FOR GENERAL SERVICE

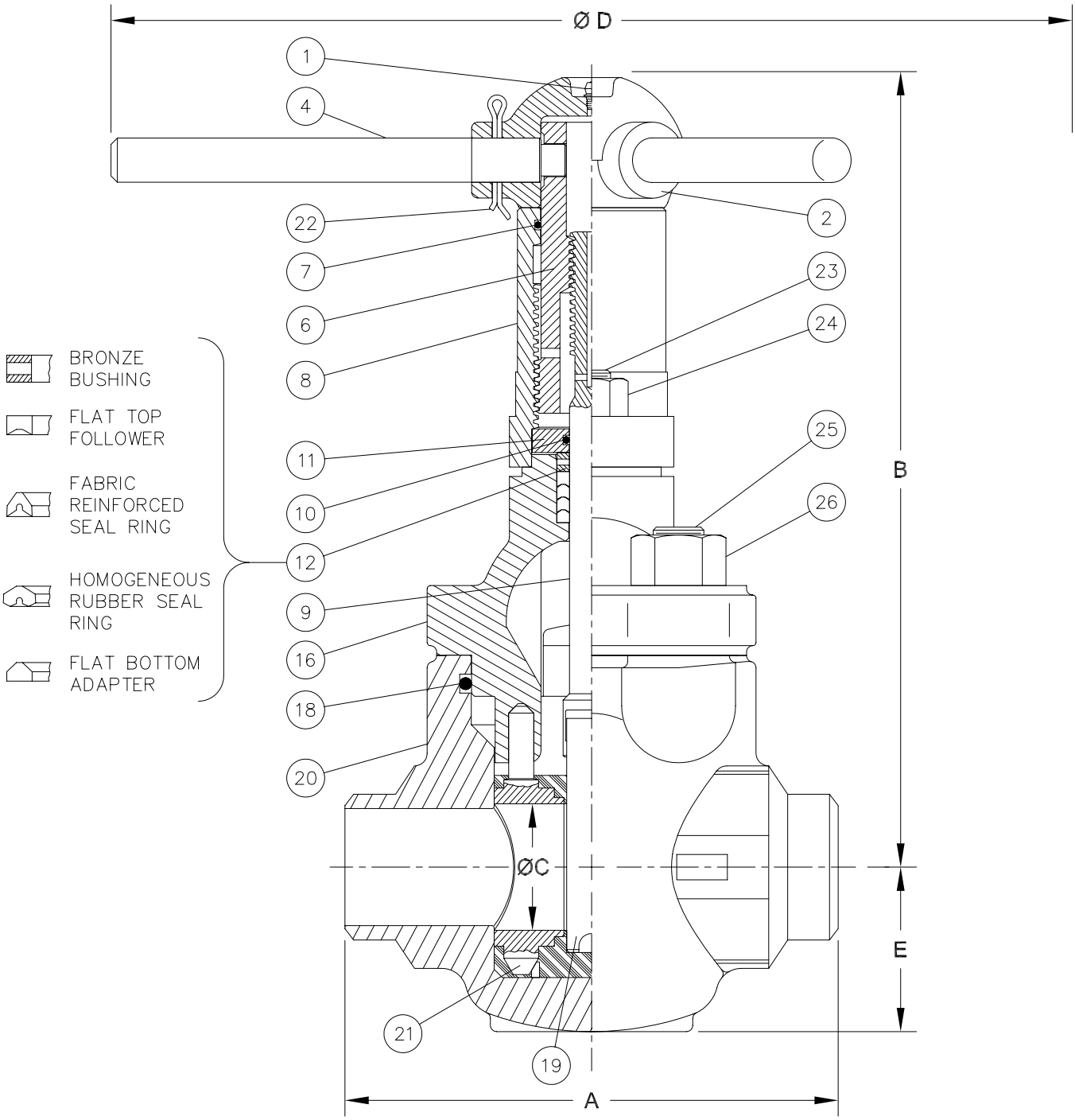

DIMENSIONAL DATA AND WEIGHTS

RATING	2000 WP 4000 TEST	3000 WP 6000 TEST	
DESCRIPTION / SIZE	4"	4"	5 X 4
A – THREADED, WELD & GROOVED	13.00	13.00	13.00
– RTJ	16.38	16.38	---
B (OPEN)	21.25	21.25	21.25
C (SEAT BORE)	4.00	4.00	4.00
D	23.00	23.00	23.00
E – THREADED, WELD & GROOVED	4.31	4.56	4.56
– RTJ	4.31	4.56	---
FLANGE O.D.	10.75	11.50	---
FLANGE BOLTS (NUMBER – SIZE)	8 – 7/8 DIA.	8 – 1-1/8 DIA.	---
RING NUMBER (RTJ)	R37	R37	---
WEIGHT (LB.) – THREADED, WELD, GROOVED	140	162	162
– FLANGED	200	265	---

ASSEMBLY PART NUMBER

END CONNECTION

FLANGED	0 – 2000 RTJ 1 – 3000 RTJ
THREADED	0 – LP 3 – LC
GROOVED	0 – SCH 80
WELD	0 – SCH 40 1 – SCH 80 2 – XXH 5 – SCH 160

PIPE SIZE	STANDARD WELD END SUFFIXES 2000 PSI	3000 PSI
4"	0 & 1	1 & 5
5"	– – –	1 & 5

BODY CONFIGURATION: 4 – Threaded 5 – Weld 6 – Grooved (2000 only) 7 – Flanged

STEM MATERIAL: 2 – 303 SS 8 – 316 SS

GATE MATERIAL*: 2 – Steel 8 – 316 SS

INSERT MATERIAL*: 1 – Steel 8 – 316 SS

SEAT/SEAL ELASTOMER:
1 – Buna–N/Buna–N
2 – Viton/Viton
3 – Hypalon/Buna–N

COATING:
0 – Uncoated 1 – DEMCO 10
4 – DEMCO 11 5 – DEMCO 12

WELD END BODIES ARE NOT COATED

BASE PART NUMBER

XXXXXXX– X X X X X X X

* Consult factory for other trim options.

PARTS LIST

	INDEX	REQD.	DESCRIPTION / SIZE/RATING	4" FULL PORT & 5" REG. PORT 2000 WP	3000 WP
			ASSEMBLY – 4" FULL PORT – THREADED	J001048	J001049
			– WELD	J001057	J001058
			– GROOVED	J011923	–––
			– FLANGED	J001039	J001040
			– 5" REGULAR PORT – WELD	–––	J001111
	1	1	LUBE FITTING Steel	J005195	J005195
	2	1	HUB ASSEMBLY ASTM A536 Ductile Iron	2139714–01	2139714–01
	4	1	LOCK HANDLE C–1213	J001897	J001897
	6	1	STEM SCREW C–1213	J001915	J001915
	7	1	STEM SCREW SEAL Buna–N	J005526–227	J005526–227
	8	1	SCREW HOUSING Carbon Steel	J001958	J001958
	9	1	STEM 303 SS –002, 316 SS –008	J001933–XXX	J001933–XXX
	10	1	SECONDARY SEAL Buna–N	J005526–214	J005526–214
	11	1	RETAINER C–1213	J001942	J001942
*	12	1	STEM SEAL ASSEMBLY Buna–N –001, Viton –006	J001951–XXX	J001951–XXX
	16	1	BONNET Cast Steel ASTM A487 4A or 2B	J001972–XXX	J001977–XXX
			Coatings	Uncoated –030, DEMCO 10 –031 DEMCO 11 –034, DEMCO 13 –035	
*	18	1	BONNET SEAL Buna–N	J005526–438	J005526–439
			Viton	J005531–438	J005531–439
*	19	1	GATE	J001926–00X	J001926–00X
			Materials	AISI 4140 NICKEL PLATED –002 Cast SS ASTM A351 Grade CF8M Annealed –008	
	20	1	BODY MATERIAL: ASTM A487 GRADE 4 CLASS A OR GRADE 2 CLASS B COATINGS (EXCEPT WELD END BODIES): DEMCO 10, DEMCO 11, DEMCO 12	CONSULT FACTORY FOR BODY PART NUMBERS	
*	21	1	SEAT ASSEMBLY	J002207–0XX	J002207–0XX
			Materials	INSERTS: –02X STEEL AISI 1040 –08X 316 SS ASTM A351 GRADE CF8M ANNEALED ELASTOMERS: –0X1 BUNA–N –0X2 VITON –0X3 HYPALON	
	22	1	PIN, LOCK HANDLE Steel	J005420–18732	J005420–18732
	23	2	BONNET STUD ASTM A193 Grade B7	J002072	J002072
	24	2	BONNET STUD NUT ASTM A194 Grade 2H	2709000–09–01	2709000–09–01
	25	4	BODY STUD ASTM A193 Grade B7	J002074	**J024500
	26	4	BODY STUD NUT ASTM A194 Grade 2H	2709000–10–01	**2709000–12–01

* RECOMMENDED SPARE PARTS – ONE EACH FOR ONE YEAR'S SERVICE
** VALVES MADE PRIOR TO 1994 MAY USE 7 PITCH STUD J002075 AND NUT J053251–042.

CAMERON

DEMCO

2000, 3000, WP DM GATE VALVES
4-1/16" FULL PORT
FOR GENERAL SERVICE

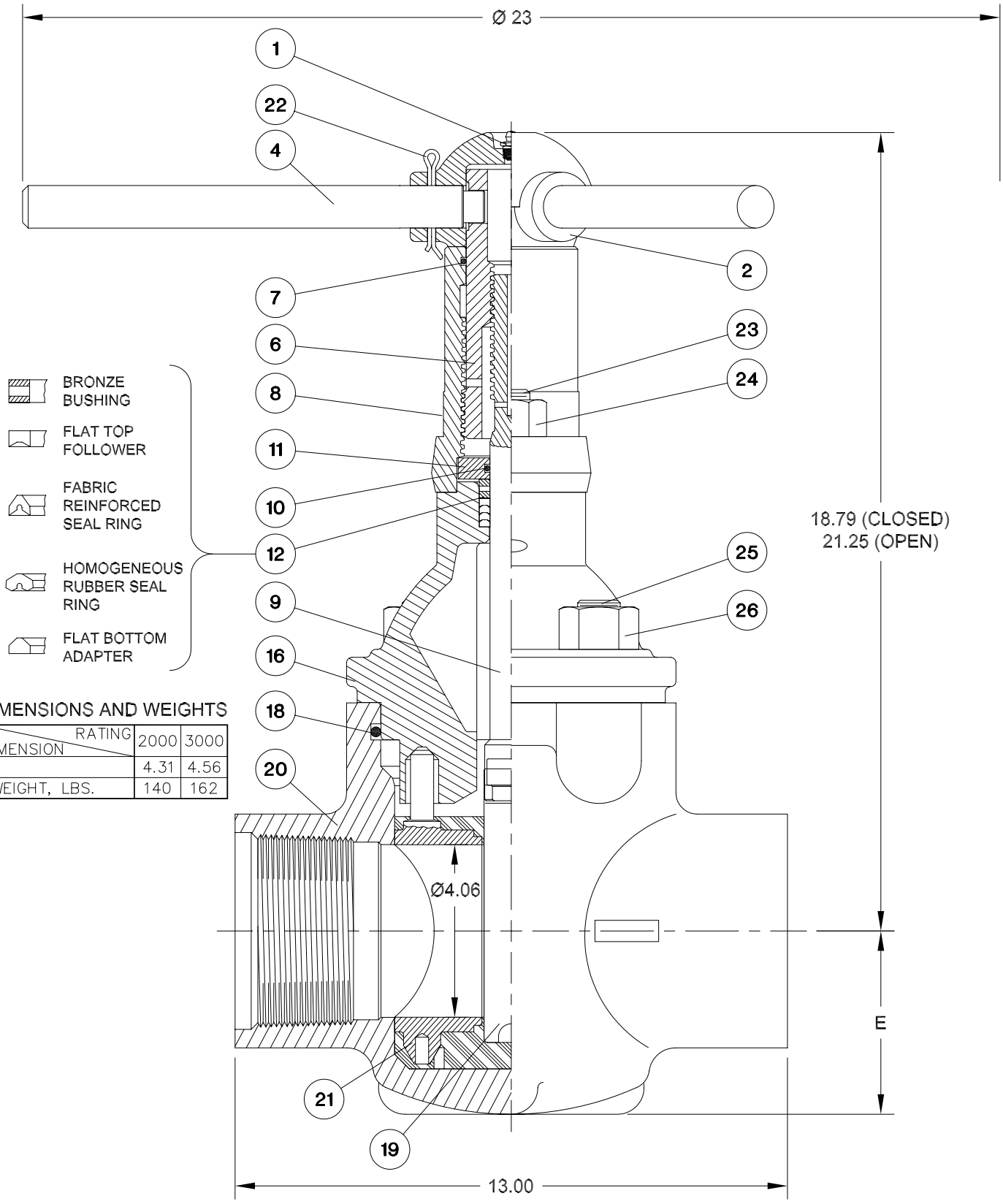

DIMENSIONS AND WEIGHTS

DIMENSION \ RATING	2000	3000
E	4.31	4.56
WEIGHT, LBS.	140	162

ASSEMBLY PART NUMBER

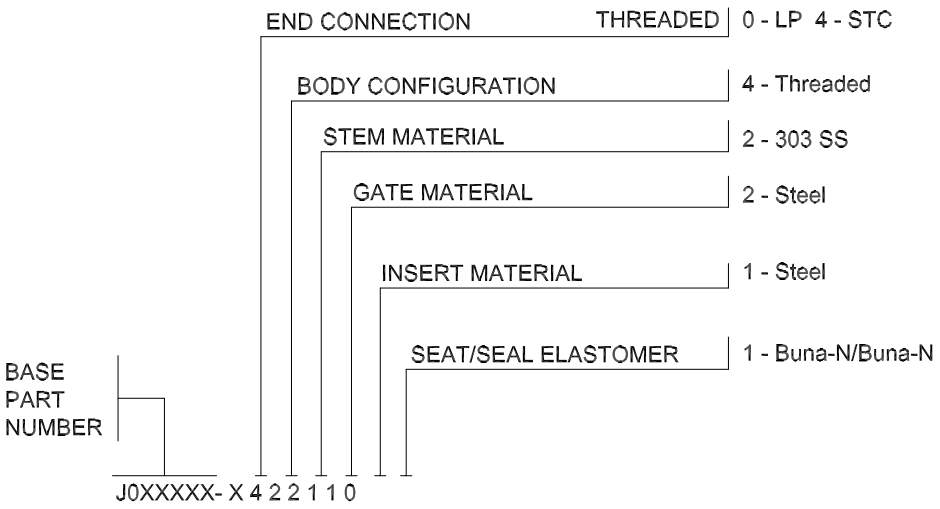

PARTS LIST

	INDEX	REQD.	DESCRIPTION / SIZE/RATING		4-1/16" FULL PORT 2000 WP	4-1/16" FULL PORT 3000 WP
			ASSEMBLY - THREADED		J025020	J024968
	1	1	LUBE FITTING	Steel	J005195	J005195
	2	1	HUB ASSEMBLY	ASTM A536 Ductile Iron	2139714-01	2139714-01
	4	1	LOCK HANDLE	C-1213	J001897	J001897
	6	1	STEM SCREW	C-1213	J001915	J001915
	7	1	STEM SCREW SEAL	Buna-N	J005526-227	J005526-227
	8	1	SCREW HOUSING	Carbon Steel	J001958	J001958
	9	1	STEM	303 SS -002	J001933-002	J001933-002
	10	1	SECONDARY SEAL	Buna-N	J005526-214	J005526-214
	11	1	RETAINER	C-1213	J001942	J001942
*	12	1	STEM SEAL ASSEMBLY	Buna-N -001	J001951-001	J001951-001
	16	1	BONNET	Cast Steel ASTM A487 4A or 2B	J001972-XXX	J001977-XXX
*	18	1	BONNET SEAL	Buna-N	J005526-438	J005526-439
*	19	1	GATE		J001926-002	J001926-002
				Material	AISI 4130 NICKEL PLATED -002	
	20	1	BODY MATERIAL: ASTM A487 GRADE 4 CLASS A OR GRADE 2 CLASS B		CONSULT FACTORY FOR BODY PART NUMBERS	
*	21	1	SEAT ASSEMBLY		2139280-01	2139280-01
				Materials	INSERTS: STEEL AISI 1040 ELASTOMER: BUNA-N	
	22	1	PIN, LOCK HANDLE	Steel	J005420-18732	J005420-18732
	23	2	BONNET STUD	ASTM A193 Grade B7	J002072	J002072
	24	2	BONNET STUD NUT	ASTM A194 Grade 2H	2709000-09-01	2709000-09-01
	25	4	BODY STUD	ASTM A193 Grade B7	J002074	J024500
	26	4	BODY STUD NUT	ASTM A194 Grade 2H	2709000-10-01	2709000-12-01

* RECOMMENDED SPARE PARTS - ONE EACH FOR ONE YEAR'S SERVICE

CAMERON

DEMCO

5000 WP SERIES DM GATE VALVES
4" FULL PORT, 5" & 6" REGULAR PORT (12-BOLT)
FOR GENERAL SERVICE

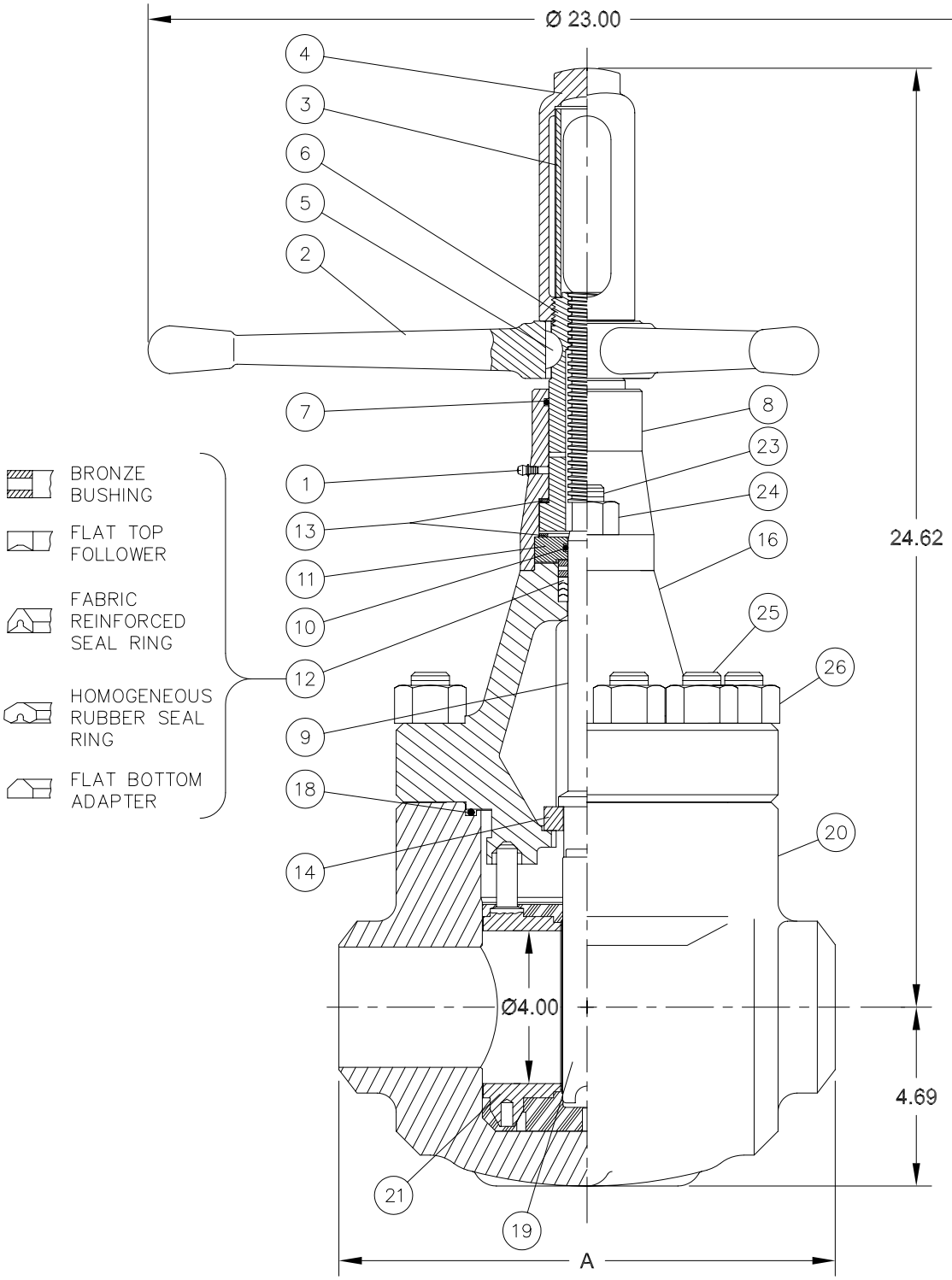

DIMENSIONAL DATA AND WEIGHTS

DIMENSION \ VALVE SIZE	4" FULL PORT	5" REGULAR PORT 6" REGULAR PORT
A – THREADED & WELD	13.00	
– RTJ	18.00	---
FLANGE O.D.	12.25	---
FLANGE BOLTS	8 – 1–1/4 DIA.	---
RING NUMBER (RTJ)	R–39	---
TURNS TO OPEN	23	
WEIGHT – THREADED & WELD	210	
(LB.) – FLANGED	330	

ASSEMBLY PART NUMBER

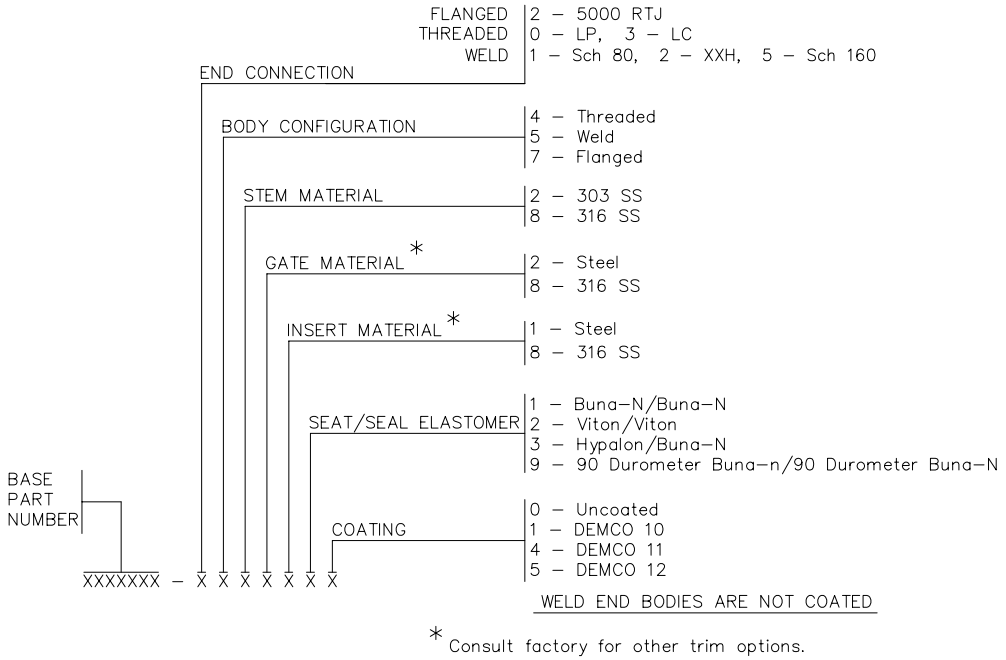

PARTS LIST

INDEX	REQD.	DESCRIPTION / VALVE SIZE	4" FULL PORT 5" & 6" REGULAR PORT 5000 WP 7500 TEST
		ASSEMBLY BASE NUMBER – 4" FULL PORT	J017263
		– 5" REGULAR PORT – WELD	J017264
		– 6" REGULAR PORT – WELD	J017265
1	1	LUBE FITTING Steel	J005195
2	1	HANDLE ASTM A536 Ductile Iron	2139481–01
3	1	TUBE Clear Acrylic	J007459
4	1	STEM CAP ASTM A536 Ductile Iron	J007411
5	1	KEY Steel	J005305–10016
6	1	STEM SCREW C1213	J007416
7	1	STEM SCREW SEAL Buna–N	J005526–226
8	1	SCREW HOUSING C1029	J007418
9	1	STEM 303 SS –002, 316 SS –008	J007439–XXX
10	1	SECONDARY SEAL Buna–N	J005526–214
11	1	RETAINER C1213	J007413
* 12	1	STEM SEAL ASSEMBLY Buna–N	J001951–001
		Viton	J001951–006
		90 Durometer Buna–N	J022093–001
13	2	BEARING TEFLON/Phenolic	J007426
14	1	DOWNSTOP RING 303 SS	J007417
16	1	BONNET ASTM A487 Grade 4 Class C	J017289–XXX
		Coatings	Uncoated –030, DEMCO 10 –031, DEMCO 11 –034, DEMCO 12 –035
* 18	1	BONNET SEAL Buna–N	J005520–361
		Viton	J005531–361
* 19	1	GATE	J001926–00X
		MATERIALS	AISI 4140 NICKEL PLATED –002 ASTM A351 GRADE CF8M –008
20	1	BODY MATERIALS: ASTM A487 GRADE 4 CLASS A COATINGS (EXCEPT WELD END BODIES): DEMCO 10, DEMCO 11, DEMCO 12	CONSULT FACTORY FOR BODY PART NUMBERS
* 21	1	SEAT ASSEMBLY	J002207–0XX
		MATERIALS	INSERTS: –02X Steel AISI 1040 –08X Stainless Steel ASTM A351 Grade CF8M Annealed ELASTOMERS: –0X1 Buna–N –0X2 Viton –0X3 Hypalon –0X9 90 Durometer Buna–N
23	2	BONNET STUD ASTM A193 Grade B7	J002072
24	2	BONNET STUD NUT ASTM A194 Grade 2H	2709000–09–01
25	12	BODY STUD ASTM A193 Grade B7	J015432
26	12	BODY STUD NUT ASTM A194 Grade 2H	2709000–10–01

* RECOMMENDED SPARE PARTS – ONE EACH FOR ONE YEAR'S SERVICE.

CAMERON

DEMCO

5000 WP SERIES DM GATE VALVES
5 x 4 AND 6 x 4 RTJ (12-BOLT)
FOR GENERAL SERVICE

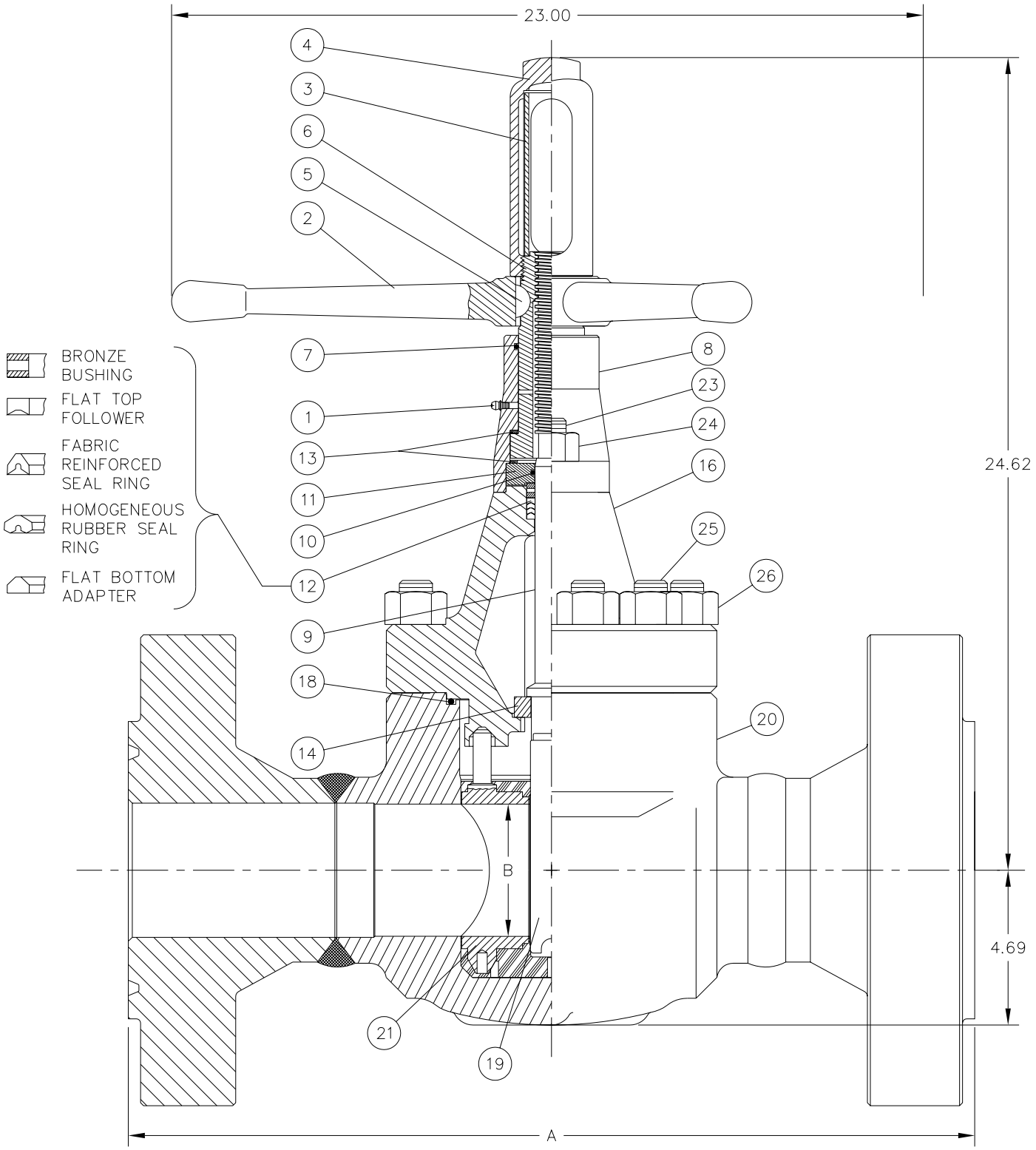

DIMENSIONAL DATA

DIMENSION \ VALVE SIZE	5 x 4	6 x 4
A – RTJ	25.62	27.25
B – BORE	4.06	5.19
FLANGE O.D.	14.75	15.50
FLANGE BOLTS	8 – 1-1/2 DIA.	12 – 1-3/8
RING NUMBER (RTJ)	R-44	R-46
TURNS TO OPEN	23	

ASSEMBLY PART NUMBER

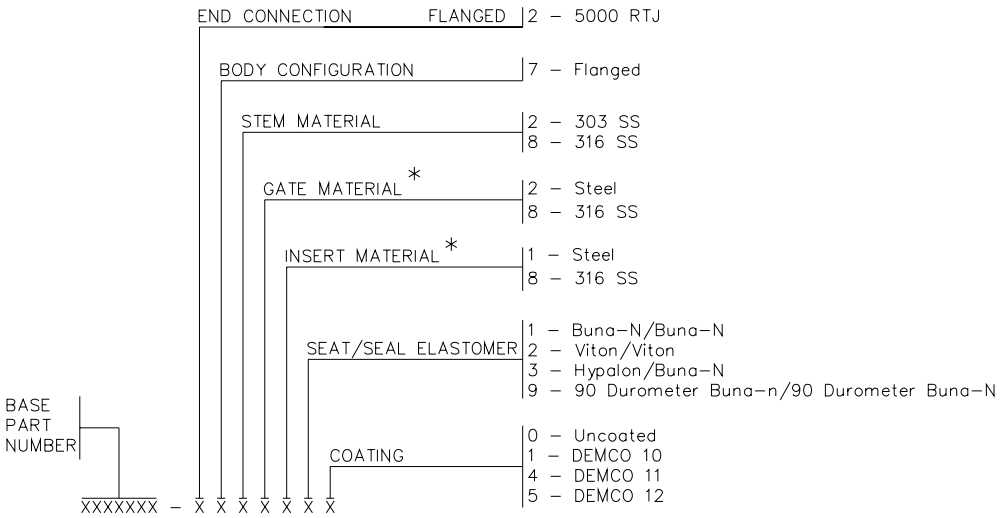

* Consult factory for other trim options.

PARTS LIST

	INDEX	REQD.	DESCRIPTION / VALVE SIZE	5 x 4 AND 6 x 4 5000 WP 7500 TEST
			ASSEMBLY BASE NUMBER – 5 x 4 – RTJ	J025138
			– 6 x 4 – RTJ	J025140
	1	1	LUBE FITTING Steel	J005195
	2	1	HANDLE ASTM A536 Ductile Iron	2139481–01
	3	1	TUBE Clear Acrylic	J007459
	4	1	STEM CAP ASTM A536 Ductile Iron	J007411
	5	1	KEY Steel	J005305–10016
	6	1	STEM SCREW C1213	J007416
	7	1	STEM SCREW SEAL Buna–N	J005526–226
	8	1	SCREW HOUSING C1029	J007418
	9	1	STEM 303 SS –002, 316 SS –008	J007439–XXX
	10	1	SECONDARY SEAL Buna–N	J005526–214
	11	1	RETAINER C1213	J007413
*	12	1	STEM SEAL ASSEMBLY Buna–N	J001951–001
			Viton	J001951–006
			90 Durometer Buna–N	J022093–001
	13	2	BEARING TEFLON/Phenolic	J007426
	14	1	DOWNSTOP RING 303 SS	J007417
	16	1	BONNET ASTM A487 Grade 4 Class C	J017289–03X
			Coatings	Uncoated –030, DEMCO 10 –031, DEMCO 11 –034, DEMCO 12 –035
*	18	1	BONNET SEAL Buna–N	J005520–361
			Viton	J005531–361
*	19	1	GATE	J001926–00X
			MATERIALS	AISI 4130 NICKEL PLATED –002 ASTM A351 GRADE CF8M –008
	20	1	BODY MATERIALS: ASTM A487 GRADE 4 CLASS A/AISI 4130 FLANGES COATINGS: DEMCO 10, DEMCO 11, DEMCO 12	CONSULT FACTORY FOR BODY PART NUMBERS
*	21	1	SEAT ASSEMBLY	J002207–0XX
			MATERIALS	INSERTS: –02X Steel AISI 1040 –08X Stainless Steel ASTM A351 Grade CF8M Annealed ELASTOMERS: –0X1 Buna–N –0X2 Viton –0X3 Hypalon –0X9 90 Durometer Buna–N
	23	2	BONNET STUD ASTM A193 Grade B7	J002072
	24	2	BONNET STUD NUT ASTM A194 Grade 2H	2709000–09–01
	25	12	BODY STUD ASTM A193 Grade B7	J015432
	26	12	BODY STUD NUT ASTM A194 Grade 2H	2709000–10–01

* RECOMMENDED SPARE PARTS – ONE EACH FOR ONE YEAR'S SERVICE.

CAMERON

DEMCO

5000 WP SERIES DM GATE VALVES
4" FULL PORT, 5" & 6" REGULAR PORT (4-BOLT)
FOR GENERAL SERVICE

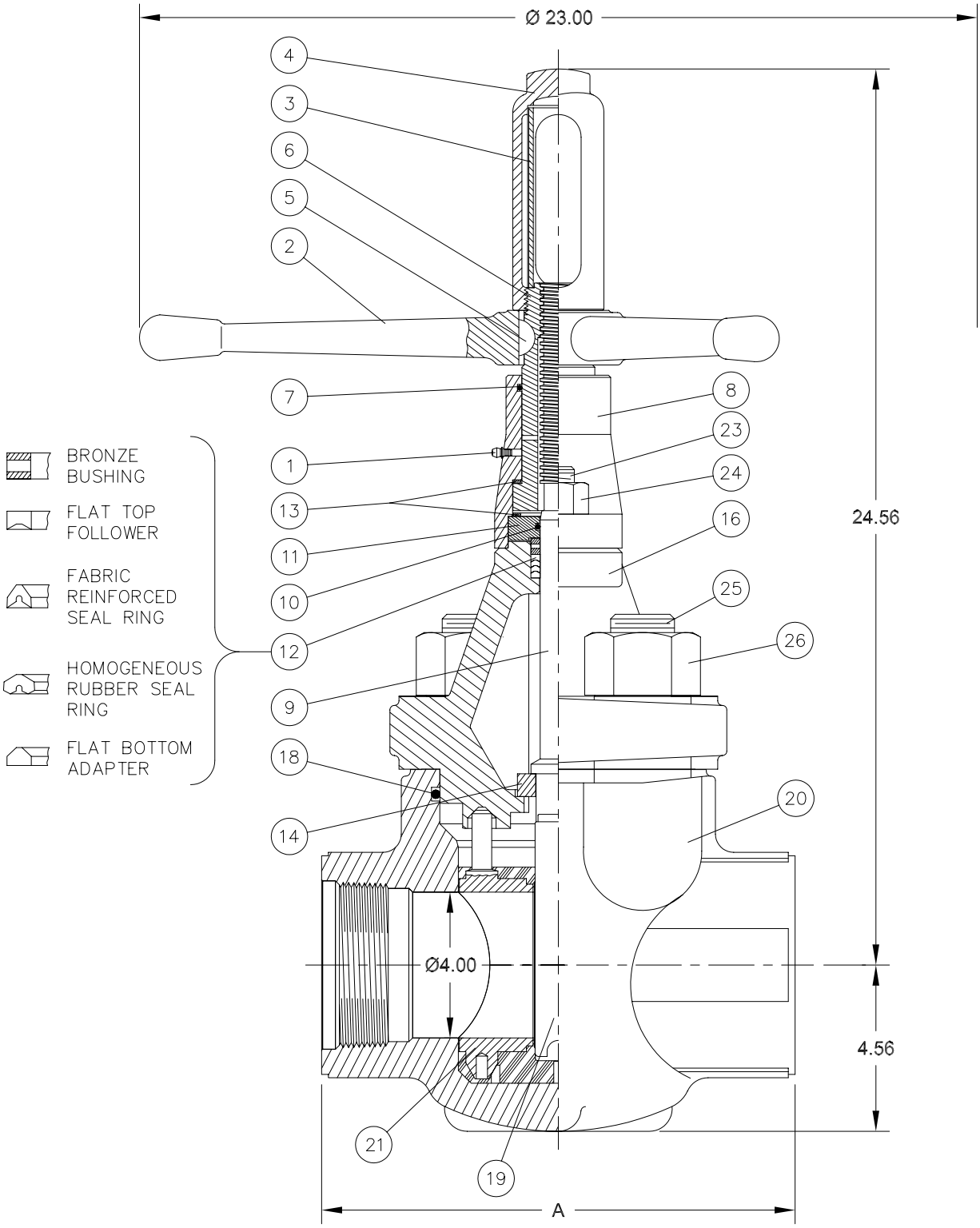

DIMENSIONAL DATA AND WEIGHTS

VALVE SIZE / DIMENSION	4" FULL PORT	5" REGULAR PORT 6" REGULAR PORT
A – THREADED & WELD	13.00	
TURNS TO OPEN	23	
WEIGHT, LB.	210	

ASSEMBLY PART NUMBER

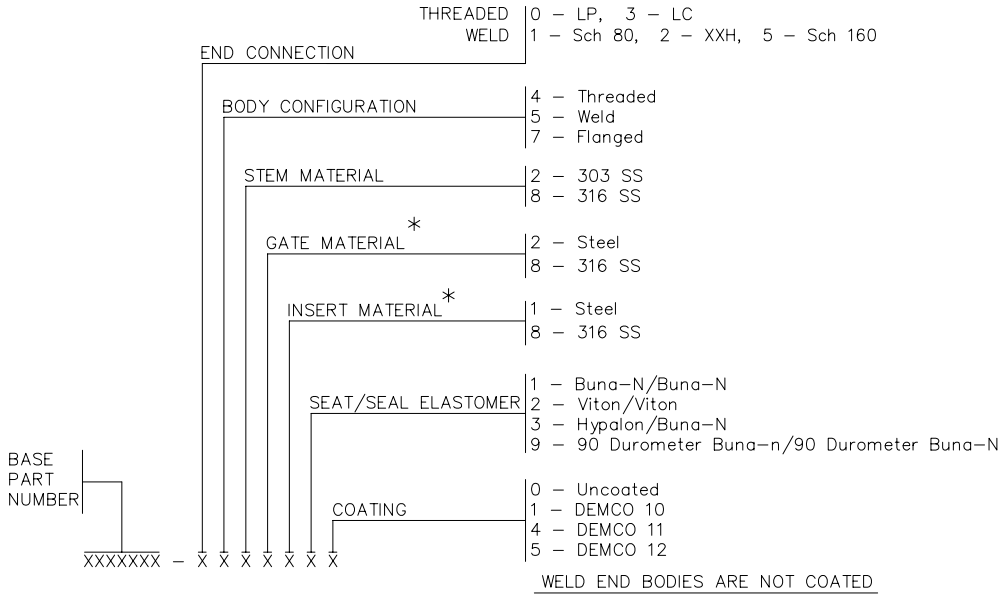

* Consult factory for other trim options.

PARTS LIST

INDEX	REQD.	DESCRIPTION / VALVE SIZE	4" FULL PORT 5" & 6" REGULAR PORT 5000 WP 7500 TEST
		ASSEMBLY BASE NUMBER – 4" FULL PORT	J007420
		– 5" REGULAR PORT – WELD	J007421
		– 6" REGULAR PORT – WELD	J011928
1	1	LUBE FITTING Steel	J005195
2	1	HANDLE ASTM A536 Ductile Iron	2139481–01
3	1	TUBE Clear Acrylic	J007459
4	1	STEM CAP ASTM A536 Ductile Iron	J007411
5	1	KEY Steel	J005305–10016
6	1	STEM SCREW C1213	J007416
7	1	STEM SCREW SEAL Buna–N	J005526–226
8	1	SCREW HOUSING C1029	J007418
9	1	STEM 303 SS –002, 316 SS –008	J007439–XXX
10	1	SECONDARY SEAL Buna–N	J005526–214
11	1	RETAINER C1213	J007413
* 12	1	STEM SEAL ASSEMBLY Buna–N	J001951–001
		Viton	J001951–006
		90 Durometer Buna–N	J022093–001
13	2	BEARING TEFLON/Phenolic	J007426
14	1	DOWNSTOP RING 303 SS	J007417
16	1	BONNET ASTM A487 Grade 4 Class C or Grade 2 Class B	J007419–XXX
		Coatings	Uncoated –030, DEMCO 10 –031, DEMCO 11 –034, DEMCO 12 –035
* 18	1	BONNET SEAL Buna–N	J005520–439
		Viton	J005531–439
* 19	1	GATE	J001926–00X
		MATERIALS	AISI 4140 NICKEL PLATED –002 CAST MONEL TYPE S –003 ASTM B148 ALLOY 953 –004 ASTM A351 GRADE CF8M –008
20	1	BODY MATERIALS: ASTM A487 GRADE 4 CLASS A OR GRADE 2 CLASS B COATINGS (EXCEPT WELD END BODIES): DEMCO 10, DEMCO 11, DEMCO 12	CONSULT FACTORY FOR BODY PART NUMBERS
* 21	1	SEAT ASSEMBLY	J002207–0XX
		MATERIALS	INSERTS: –02X Steel AISI C1040 –08X Stainless Steel ASTM A351 Grade CF8M Annealed ELASTOMERS: –0X1 Buna–N –0X2 Viton –0X3 Hypalon –0X9 90 Durometer Buna–N
23	2	BONNET STUD ASTM A193 Grade B7	J002072
24	2	BONNET STUD NUT ASTM A194 Grade 2H	2709000–09–01
25	4	BODY STUD ASTM A193 Grade B7	J002077
26	4	BODY STUD NUT ASTM A194 Grade 2H	J001890

* RECOMMENDED SPARE PARTS – ONE EACH FOR ONE YEAR'S SERVICE.

CAMERON

DEMCO

2" FULL PORT 5000 WP DM GATE VALVE FOR NORTH SEA, GENERAL SERVICE

G-31
8-13-04
SHEET 1

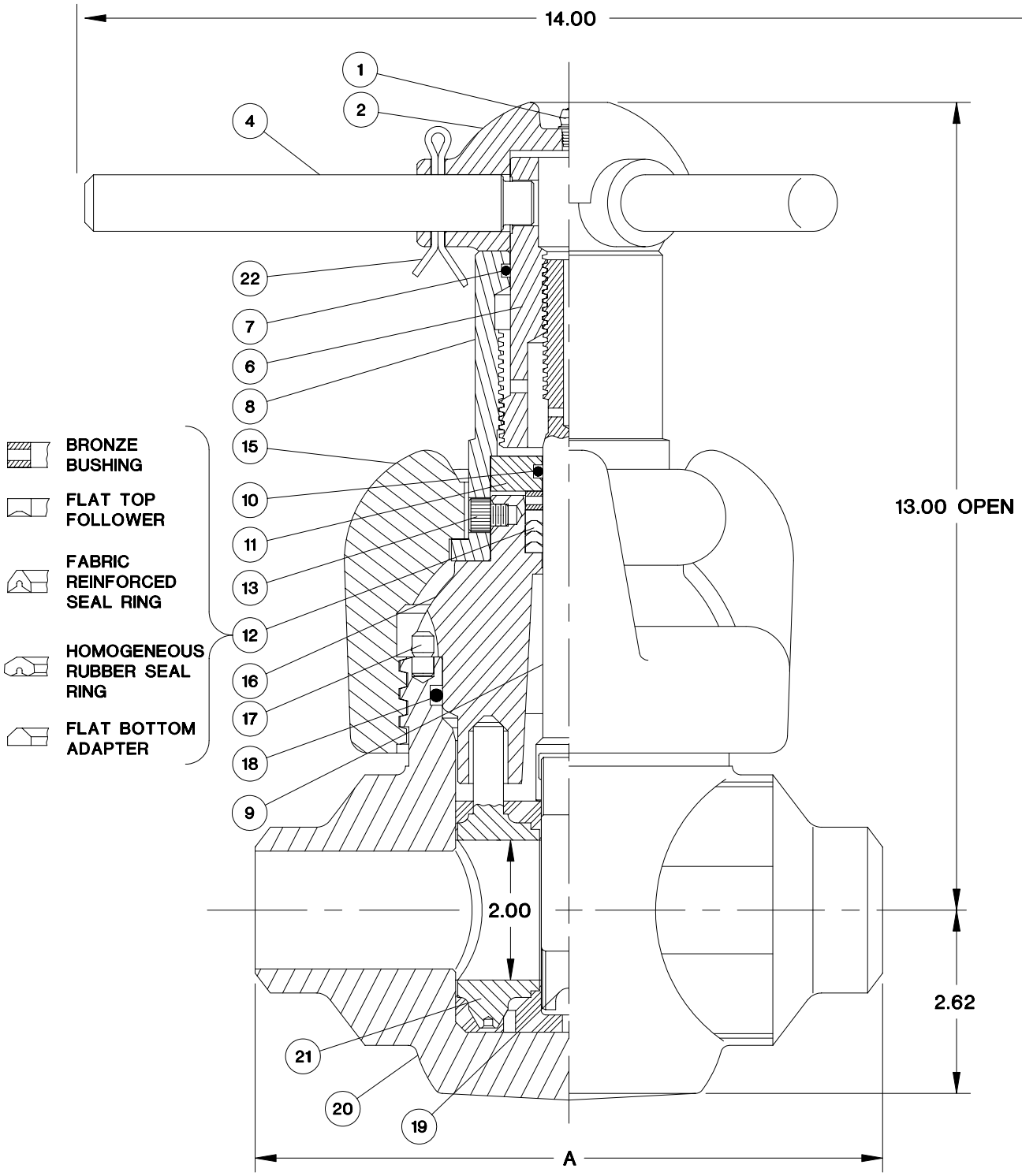

DIMENSIONAL DATA

DIMENSION \ SIZE	2" FULL PORT
A – WELD	9.00
– RTJ	12.12
FLANGE O.D.	8.50
FLANGE BOLTS (NUMBER – SIZE)	8 – 7/8 DIA.
RING NO. (RTJ)	R-24

ASSEMBLY PART NUMBER

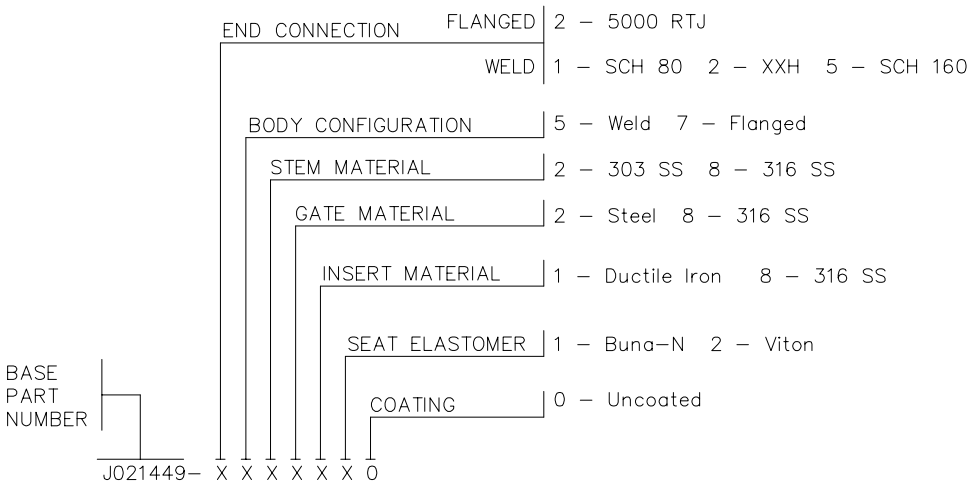

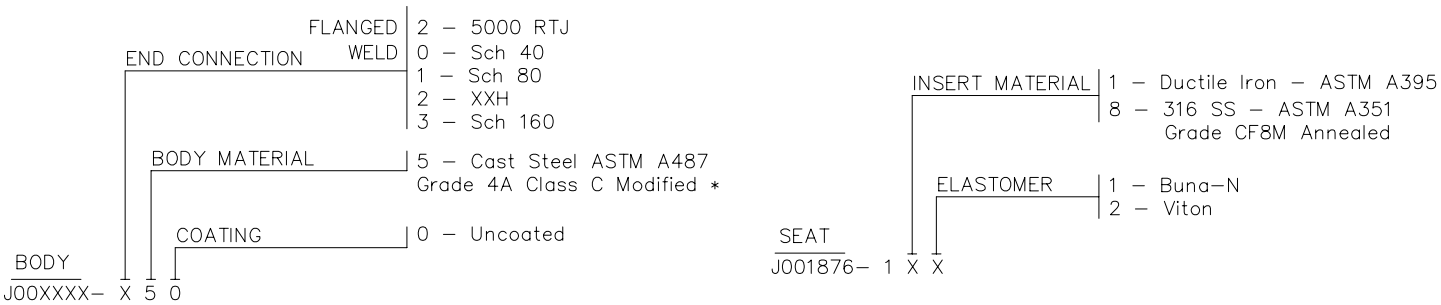

PARTS LIST

INDEX	REQD.	DESCRIPTION / SIZE		2" FULL PORT
		ASSEMBLY		J021449
1	1	LUBE FITTING	Steel	005929–05
2	1	HANDLE	ASTM A 536 Ductile Iron	2139712–01
4	1	LOCK HANDLE	C–1213	J001891
6	1	STEM SCREW	C–1213	J001913
7	1	STEM SCREW SEAL	Buna–N	J005526–224
8	1	SCREW HOUSING	ASTM A350 Carbon Steel	J021443
9	1	STEM	316 SS	J001931–108
10	1	SECONDARY SEAL	Buna–N	J005526–210
11	1	RETAINER	17–4 PH SS	J021432
12	1	STEM SEAL ASSEMBLY	Buna–N –001, Viton –006	J001949–XXX
13	1	LOCKSCREW	Steel	J005665–22004
15	1	COUPLING	Cast Steel ASTM A487 Gr. 4 Class C Modified*	J001445–050
16	1	BONNET	Cast Steel ASTM A487 Gr. 4 Class C Modified*	J001237–050
17	1	INDEX PIN	Tool steel	J001981
18	1	BONNET SEAL	Buna–N	J005520–342
			Viton	J005521–342
19	1	GATE	AISI 4130 Nickel plated steel –002 ASTM A351 Grade CF8M –008	J001887–10X
20	1	BODY – FLANGED		J001510–250
		– WELD		J021458–X50
21	1	SEAT ASSEMBLY		J001876–1XX
22	1	PIN, LOCK HANDLE	Steel	J005420–18728

* A487 GRADE 4 CLASS C MODIFIED: 0.23% MAX. CARBON, 0.60% MAX. CARBON EQUIVALENT [C+Mn/6+(Cr+Mo+V)/5+(Ni+Cu)/15]. HARDNESS NOT TO EXCEED 22 HRC AT ANY POINT. CHARPY IMPACT VALUES AT –13°F TO BE 28 FT–LBS MINIMUM. FOR THE AVERAGE OF THREE SPECIMENS, 21 FT–LBS MINIMUM FOR EACH SPECIMEN. TEST TO BE IN ACCORDANCE WITH ASTM A370.

CAMERON

DEMCO

3" FULL PORT & 4" REGULAR PORT 5000 WP DM GATE VALVE FOR NORTH SEA, GENERAL SERVICE

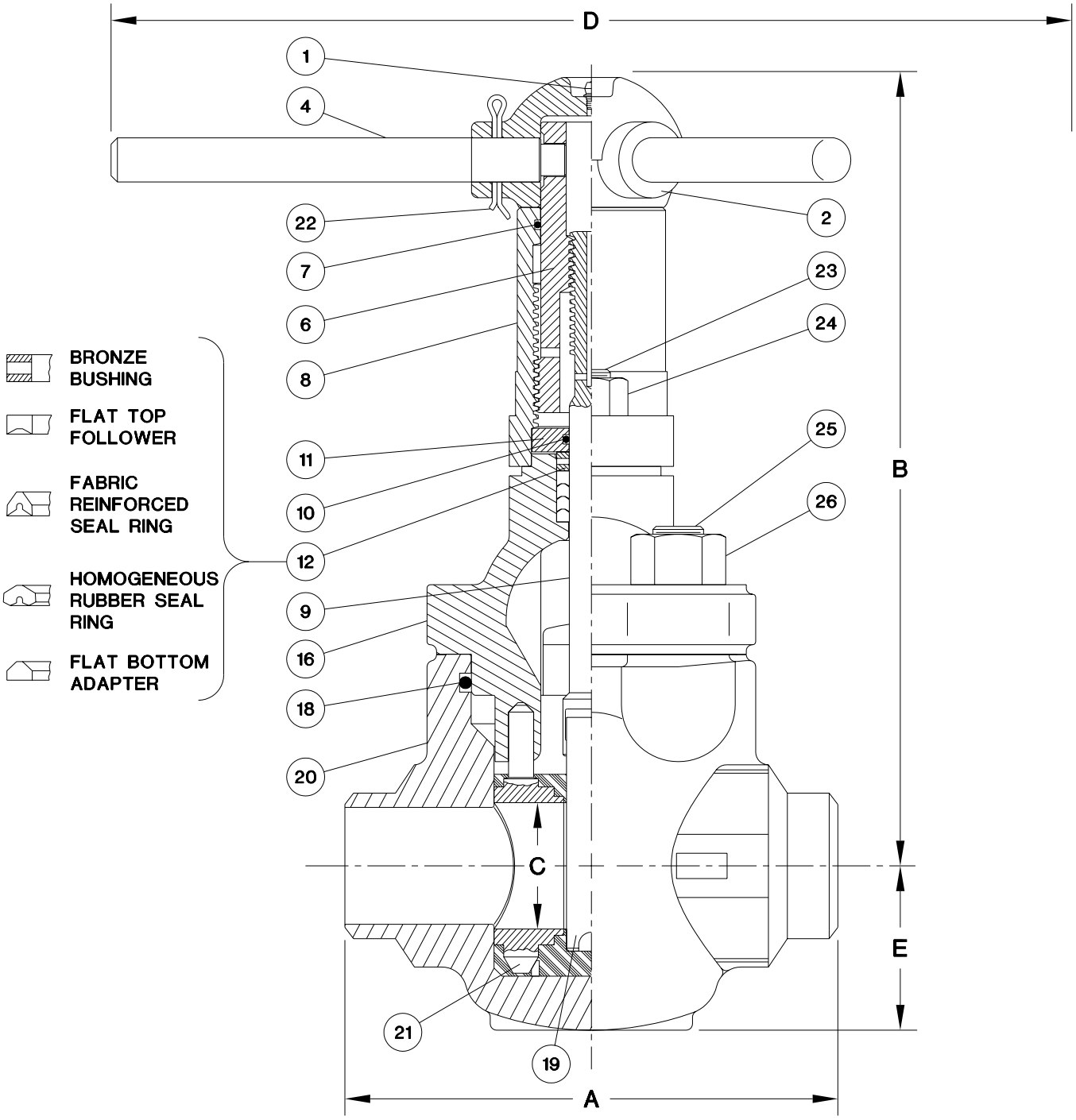

DIMENSIONAL DATA

SIZE / DIMENSIONS	3" FULL PORT
A – WELD	11.00
– RTJ	15.62
B (OPEN)	18.00
C (SEAT BORE)	3.00
D	19.00
E	3.94
FLANGE O.D.	10.50
FLANGE BOLTS (NUMBER – SIZE)	8 – 1-1/8 DIA.
RING NUMBER (RTJ)	R35

ASSEMBLY PART NUMBER

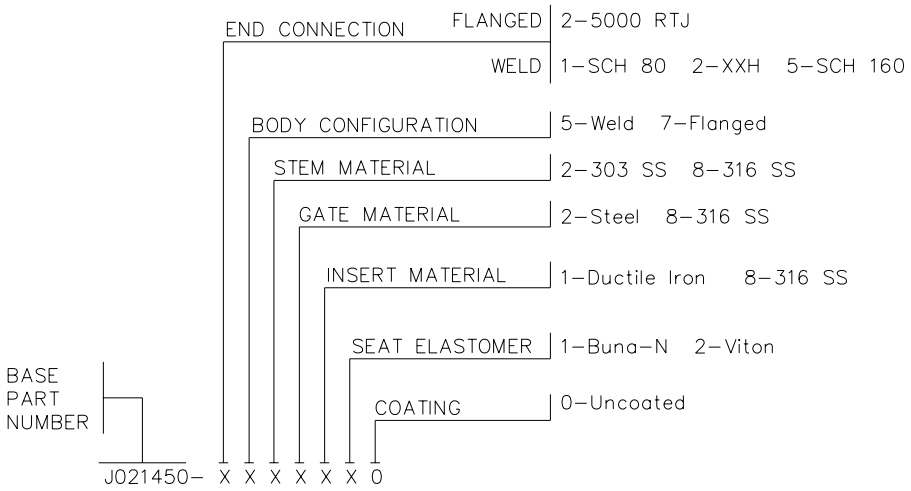

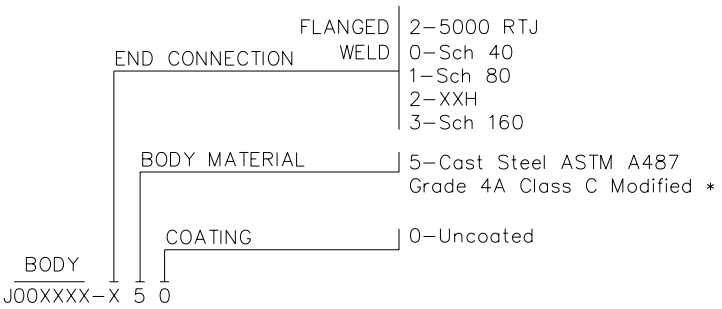

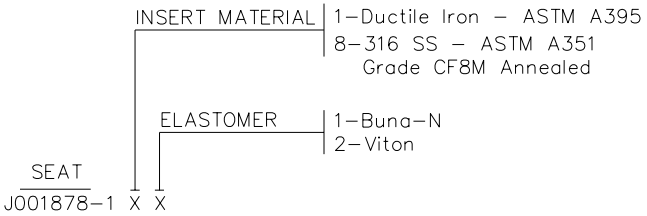

PARTS LIST

INDEX	REQD.	DESCRIPTION / SIZE		3" FULL PORT	4" REG PORT
		ASSEMBLY		J021450	J025057
1	1	LUBE FITTING	Steel	005929-05	
2	1	HANDLE	ASTM A 536 Ductile Iron	2139713-01	
4	1	LOCK HANDLE	C-1213	J001892	
6	1	STEM SCREW	C-1213	J001914-003	
7	1	STEM SCREW SEAL	Buna-N	J005526-226	
8	1	SCREW HOUSING	ASTM A350 Carbon Steel	J001852	
9	1	STEM	316 SS	J001932-108	
10	1	SECONDARY SEAL	Buna-N	J005526-212	
11	1	RETAINER	17-4 PH SS	J021433	
12	1	STEM SEAL ASSEMBLY	Buna-N -001, Viton -006	J001950-XXX	
16	1	BONNET	Cast Steel ASTM A487 Gr. 4 Class C Modified*	J001980-050	
18	1	BONNET SEAL	Buna-N	J005526-433	
			Viton	J005531-433	
19	1	GATE	AISI 4130 Nickel plated steel -102 ASTM A351 Grade CF8M -108	J001886-10X	
20	1	BODY - FLANGED		J001511-250	
		- WELD		J001266-X50	J025056-X50
21	1	SEAT ASSEMBLY		J001878-1XX	
22	1	PIN, LOCK HANDLE	Steel	J005420-18732	
23	2	BONNET STUD	ASTM A193 Grade B7	J021436	
24	2	BONNET STUD NUT	ASTM A194 Grade 7	J053252-034	
25	4	BODY STUD	ASTM A193 Grade B7	J021437	
26	4	BODY STUD NUT	ASTM A194 Grade 7	J053252-144	

* A487 GRADE 4 CLASS C MODIFIED: 0.23% MAX. CARBON, 0.60% MAX. CARBON EQUIVALENT [C+Mn/6+(Cr+Mo+V)/5+(Ni+Cu)/15]. HARDNESS NOT TO EXCEED 22 HRC AT ANY POINT. CHARPY IMPACT VALUES AT -13°F TO BE 28 FT-LBS MINIMUM. FOR THE AVERAGE OF THREE SPECIMENS, 21 FT-LBS MINIMUM FOR EACH SPECIMEN. TEST TO BE IN ACCORDANCE WITH ASTM A370.

CAMERON

DEMCO

5000 WP SERIES DM GATE VALVE FOR NORTH SEA
4" FULL PORT, 5" & 6" REGULAR PORT, GENERAL SERVICE

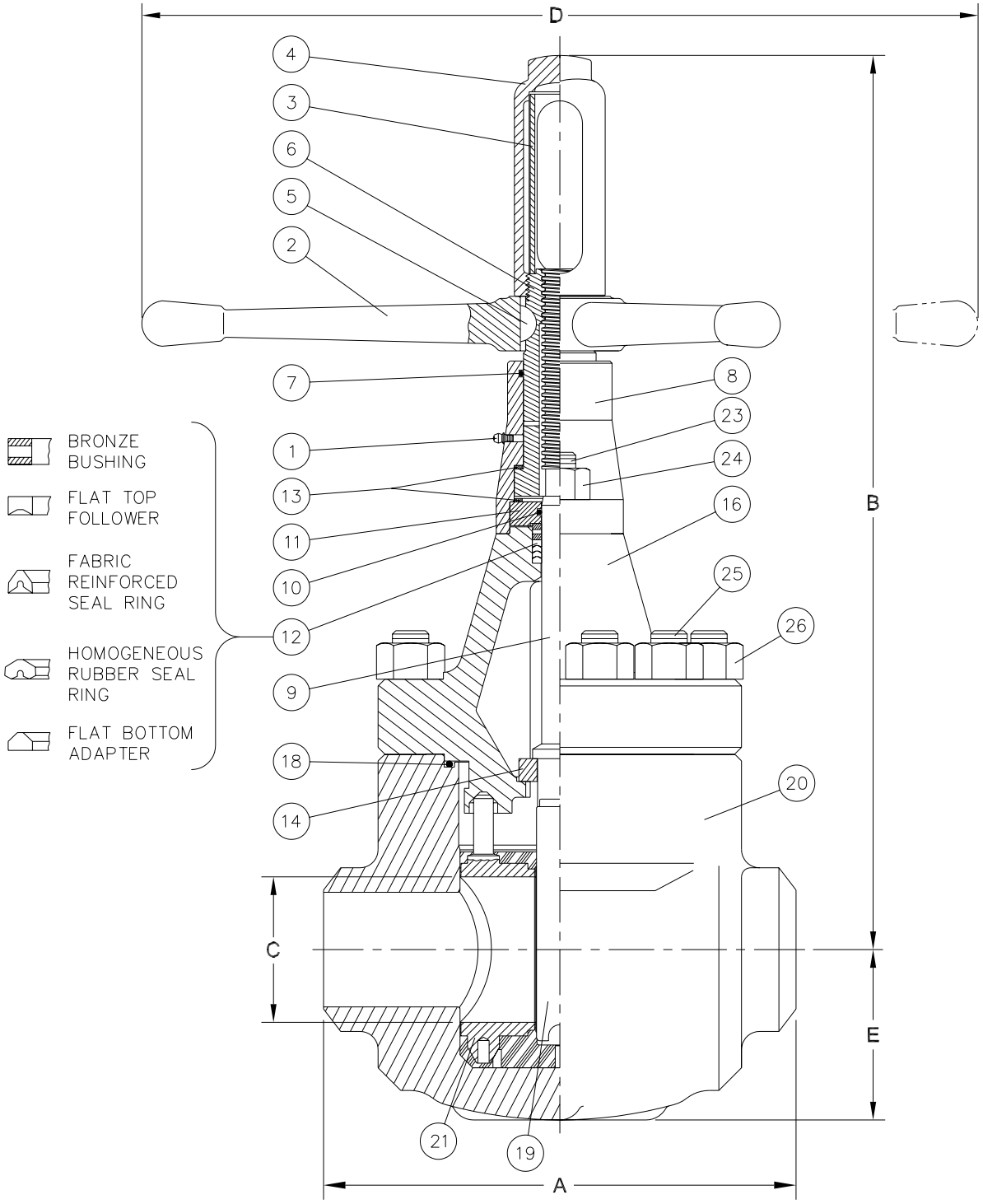

DIMENSIONAL DATA

DIMENSION \ VALVE SIZE	4" FULL PORT	5" REGULAR PORT	6" REGULAR PORT
A – WELD		13.00	
– RTJ	18.00	25.75	
B – (OPEN)		24.62	
C – (SEAT BORE)		ø 4.00	
D		ø 22.75	
E		4.69	
F (FLANGE O.D.)	12.25	14.75	
FLANGE BOLTS	8 1-1/4	8 1-1/2	
RING NO. RTJ	R-39	R-44	

ASSEMBLY PART NUMBER

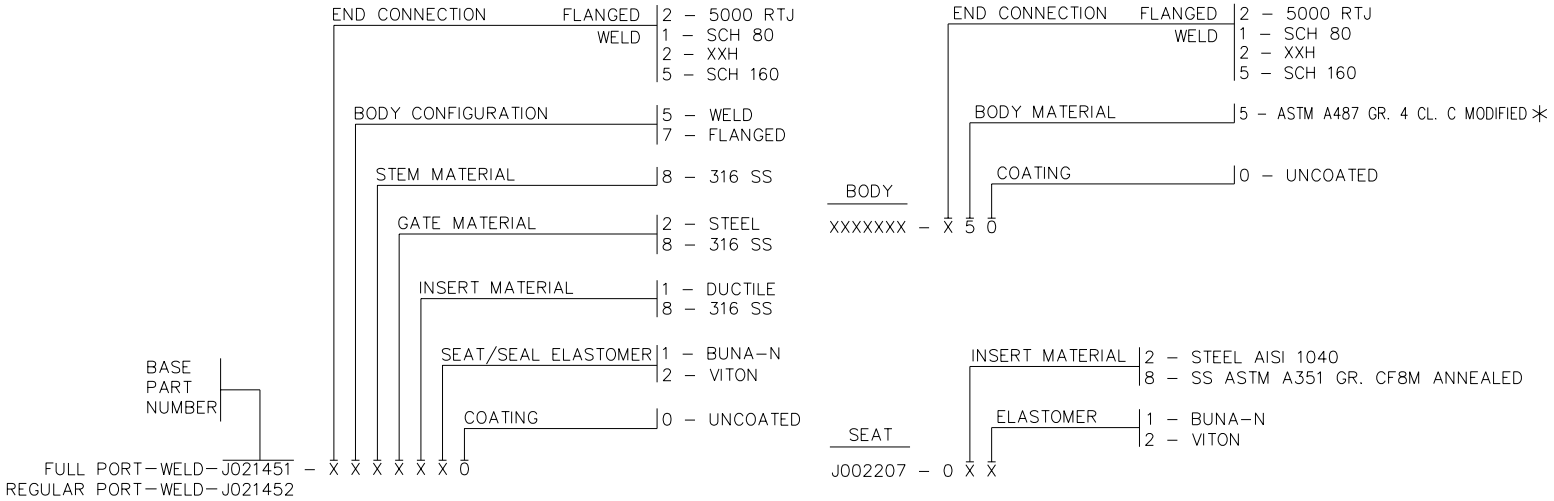

PARTS LIST

INDEX	REQD.	DESCRIPTION / VALVE SIZE		4" FULL PORT	5" REGULAR PORT	6" REGULAR PORT
		ASSEMBLY BASE NUMBER		J021451–	J021452–	J023909–
1	1	LUBE FITTING	Steel	J005195		
2	1	HANDLE ASSEMBLY	Ductile Iron/Steel	J007414		
3	1	TUBE	Clear Acrylic	J007459		
4	1	STEM CAP	ASTM A536 GR 65–45–12	J007411		
5	1	KEY	Steel	J005305–10016		
6	1	STEM SCREW	C1213	J007416		
7	1	STEM SCREW SEAL	Buna–N	J005526–226		
8	1	SCREW HOUSING	ASTM A352 GR. LCC OR ASTM 350 GR. LF2	J021448–040		
9	1	STEM	316 SS –008	J007439–00X		
10	1	SECONDARY SEAL	Buna–N	J005526–214		
11	1	RETAINER	17–4 PH SS	J021434		
12	1	STEM SEAL ASSEMBLY	Buna–N –001, Viton –006	J001951–001		
13	2	BEARING	TEFLON/Phenolic	J007426		
14	1	DOWNSTOP RING	303 SS	J007417		
16	1	BONNET	ASTM A487 Gr. 4 CL. C Modified *	J017289–050		
18	1	BONNET SEAL	Buna–N	J005537–361		
			Viton	J005531–361		
19	1	GATE		J001926–00X		
			MATERIALS	AISI 4130 NICKEL PLATED –002		
				ASTM A351 GRADE CF8M –008		
20	1	BODY – WELD		J017285–X50	J017286–X50	J017287–X50
		BODY – FLANGED		J017288–250	J021613–250	
21	1	SEAT ASSEMBLY		J002207–0XX		
23	2	BONNET STUD	ASTM A320 Grade L7	J021441		
24	2	BONNET STUD NUT	ASTM A320 Grade L7	J053252–036		
25	12	BODY STUD	ASTM A320 Grade L7	J021442		
26	12	BODY STUD NUT	ASTM A320 Grade L7	J053252–038		

* A487 GR. 4 CL. C MODIFIED: 0.23% MAX. CARBON, 0.60% MAX. CARBON EQUIVALENT [C+Mn/6+(Cr+Mo+V)/5+(Ni+Cu)/15]. HARDNESS NOT TO EXCEED 22 HRC AT ANY POINT. CHARPY IMPACT VALUES AT –13°F TO BE 28 FT.–LBS. MIN. FOR THE AVERAGE OF THREE SPECIMENS, 21 FT.–LBS. MIN. FOR EACH SPECIMEN. TEST TO BE IN ACCORDANCE WITH ASTM A370.

CAMERON

DEMCO

G-34
9-8-05
SHEET 1 OF 2

SERIES DM GATE VALVE
5" FULL PORT & 6" REGULAR PORT
3000 & 5000 WP
FOR GENERAL SERVICE

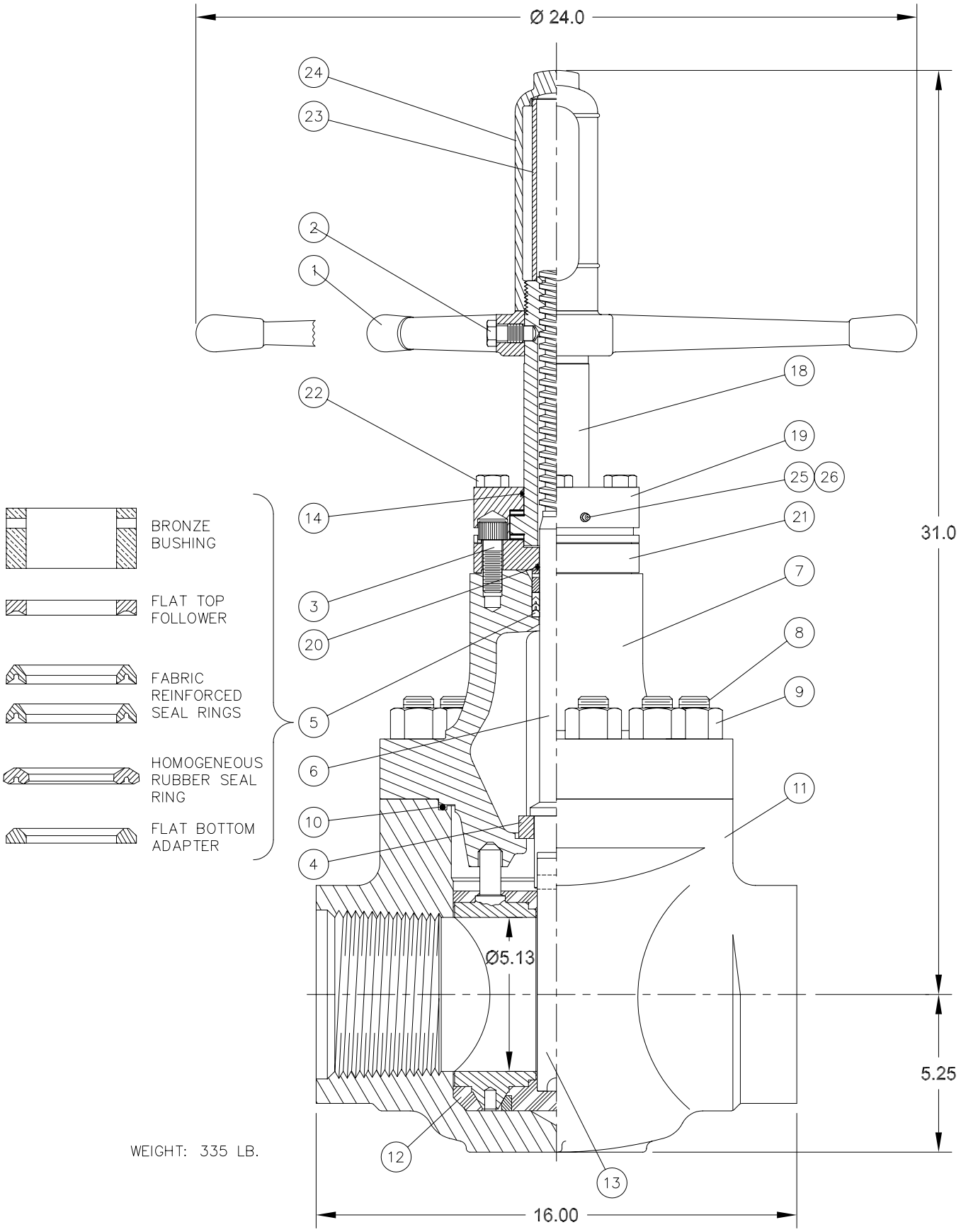

WEIGHT: 335 LB.

ASSEMBLY PART NUMBER

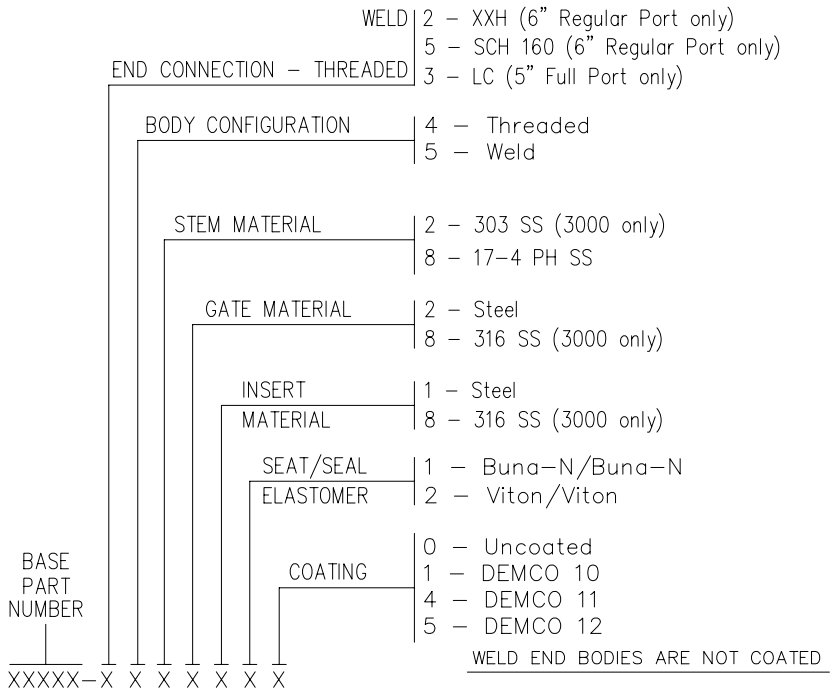

PARTS LIST

	INDEX	REQD.	DESCRIPTION / RATING	3000 WP 6000 TEST	5000 WP 7500 TEST
			ASSEMBLY PART NUMBER – FULL PORT – THREADED	J021954	J023925
			– REGULAR PORT – WELD	---	J025086
	1	1	HANDWHEEL — DUCTILE IRON ASTM A536 GR. 65–45–12	2227656–01	
	2	1	SCREW – HANDWHEEL — STEEL AISI C1018	J014832	
	3	4	SCREW – RETAINER — ALLOY STEEL	J005665–32028	
	4	1	DOWNSTOP RING — STEEL AISI C1018	J021942	
*	5	1	STEM SEAL ASSEMBLY w/BUSHING — –001 BUNA–N –006 VITON	J015853–00X	
	6	1	STEM — –002 303 SS	J021943–00X	J021943–009
			–009 17–4 PH SS		
	7	1	BONNET — CAST STEEL ASTM A487 GRADE 4 CASS C	J021944–03X	
			COATINGS	UNCOATED –030, DEMCO 10 –031, DEMCO 11, –034, DEMCO 12 –035	
	8	12	BODY STUD — STEEL ASTM A193 GR. B7	J015432	
	9	12	BODY STUD NUT — STEEL ASTM A194 GR. 2H	2709000–10–01	
*	10	1	BONNET SEAL — BUNA–N	J005526–367	
			VITON	J005531–367	
	11	1	BODY MATERIAL: ASTM A487 GRADE 4 CLASS A COATINGS: (EXCEPT WELD END BODIES): DEMCO 10, DEMCO 11, DEMCO 12	CONSULT FACTORY FOR BODY PART NUMBERS	
*	12	1	SEAT ASSEMBLY	J021948–011	J021948–019
				J021948–012	---
				J021948–081	---
				J021948–082	---
			MATERIALS	INSERTS: –01X STEEL AISI 1040 –08X 316 SS (3000 ONLY) ELASTOMERS: –0X1 BUNA–N –0X2 VITON –0X9 90 DURO BUNA–N	
*	13	1	GATE — –002 STEEL AISI 4140 NICKEL PLATED	J021952–00X	J021952–002
			–008 316 SS (3000 ONLY)		
	14	1	STEM SCREW SEAL — BUNA–N	J005526–228	
	18	1	STEM SCREW w/BEARINGS — STEEL AISI C1018, STEEL BEARINGS	J023888	---
			AL. BRZ. ASTM B148 ALLOY 955, STEEL BEARINGS	---	J024526
	19	1	HOUSING — STEEL AISI C1018	J015332	
	20	1	SECONDARY SEAL — BUNA–N	J005526–216	
	21	1	RETAINER — STEEL AISI C1018	J015330	
	22	4	SCREW – HOUSING — STEEL	J005650–32056	
	23	1	TUBE — CLEAR ACRYLIC	J012852	
	24	1	STEM CAP — DUCTILE IRON ASTM A536 GR. 65–45–12	J015855	
	25	1	LUBE FITTING — STEEL	J005195	
	26	1	RELIEF FITTING — STEEL	J051971	

* RECOMMENDED SPARE PARTS – ONE EACH FOR ONE YEAR'S SERVICE.

CAMERON

DEMCO
SERIES DM GATE VALVE
5" FULL PORT 1000 WP
FOR GENERAL SERVICE

G-35
9-8-05
SHEET 1 OF 2

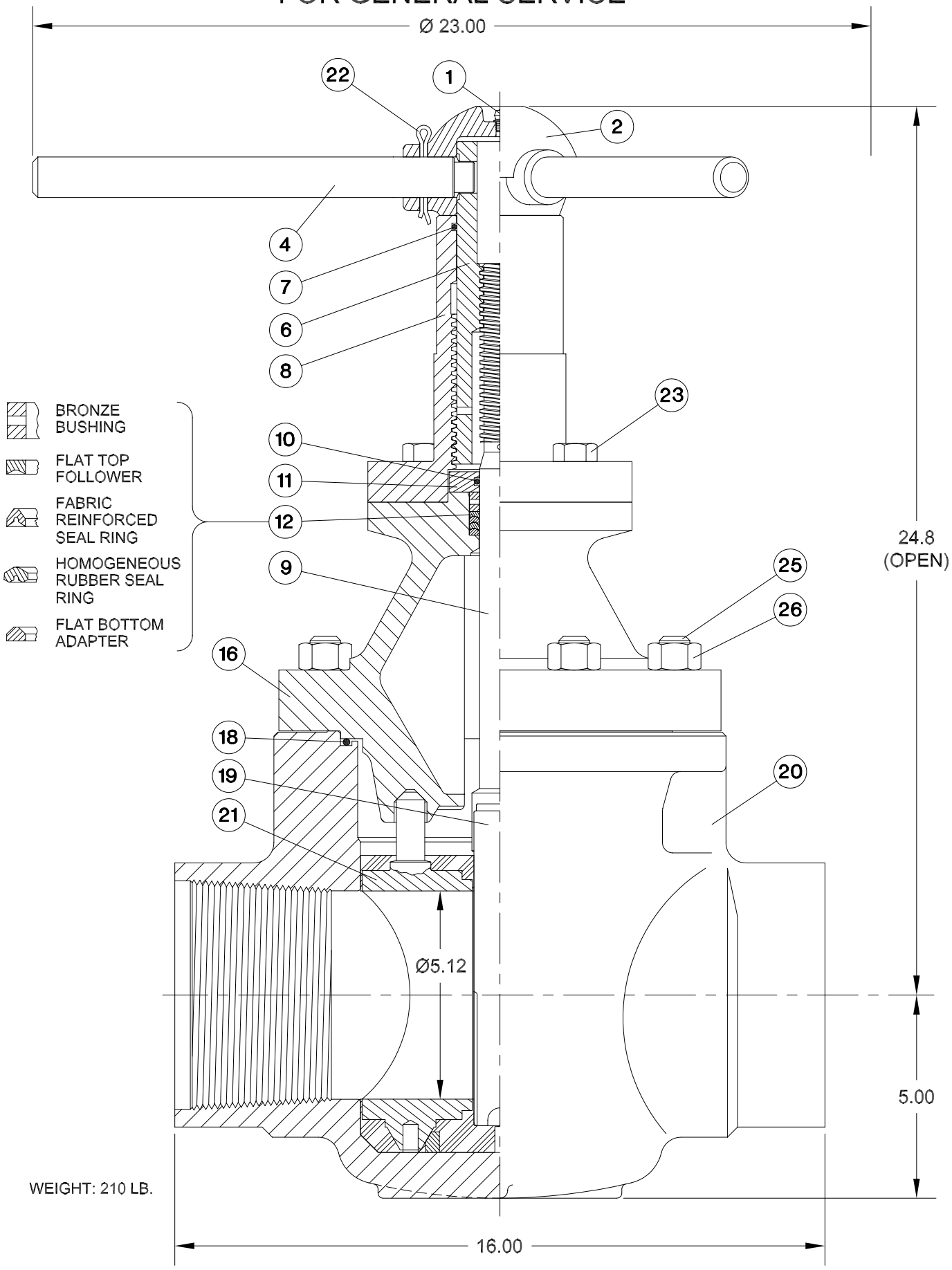

WEIGHT: 210 LB.

ASSEMBLY PART NUMBER

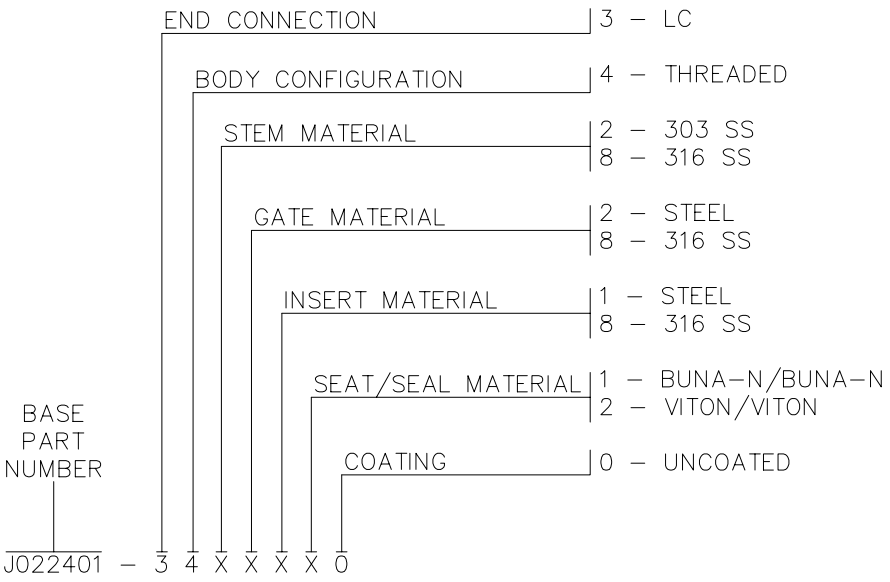

PARTS LIST

	INDEX	REQD.	DESCRIPTION / SIZE/RATING		5" 1000
			ASSEMBLY BASE NUMBER		J022401
	1	1	LUBE FITTING	Steel	J005195
	2	1	HUB ASSEMBLY	ASTM A395 Ductile Iron	2139714–01
	4	1	LOCK HANDLE	C1213	J001897
	6	1	STEM SCREW	C1213	J022390
	7	1	STEM SCREW SEAL	Buna–N	J005526–227
	8	1	SCREW HOUSING	ASTM A216 Grade WCB	J022388
	9	1	STEM	303 SS	J022389–002
				316 SS	J022389–008
	10	1	SECONDARY SEAL	Buna–N	J005526–214
	11	1	RETAINER	C1213	J001942
*	12	1	STEM SEAL ASSEMBLY	Buna–N	J001951–001
				Viton	J001951–006
	16	1	BONNET	ASTM A216 Grade WCB	J022386–020
*	18	1	BONNET SEAL	Buna–N	J005526–367
				Viton	J005531–367
*	19	1	GATE	AISI 4130 Nickel Plated	J021952–002
				ASTM A351 Grade CF8M	J021952–008
	20	1	BODY – THREADED		CONSULT FACTORY FOR BODY PART NUMBER
				Material	ASTM A216 Grade WCB
*	21	1	SEAT ASSEMBLY		J021948–0XX
				Materials	Inserts: –01X Steel AISI C1040 –08X 316 SS ASTM A351 Grade CF8M Elastomers: –0X1 Buna–N, –0X2 Viton
	22	1	PIN, LOCK HANDLE	Steel	J005420–18732
	23	4	BONNET SCREW	Steel SAE Grade 2	J005650–32028
	25	8	BODY STUD	ASTM A193 Grade B7	J007502
	26	8	BODY STUD NUT	ASTM A194 Grade 2H	2709000–08–01

* RECOMMENDED SPARE PARTS – ONE EACH FOR ONE YEAR'S SERVICE

CAMERON

DEMCO

G-38
3-9-06
SHEET 1 OF 2

2" 7500 WP DM GATE VALVES FOR GENERAL SERVICE

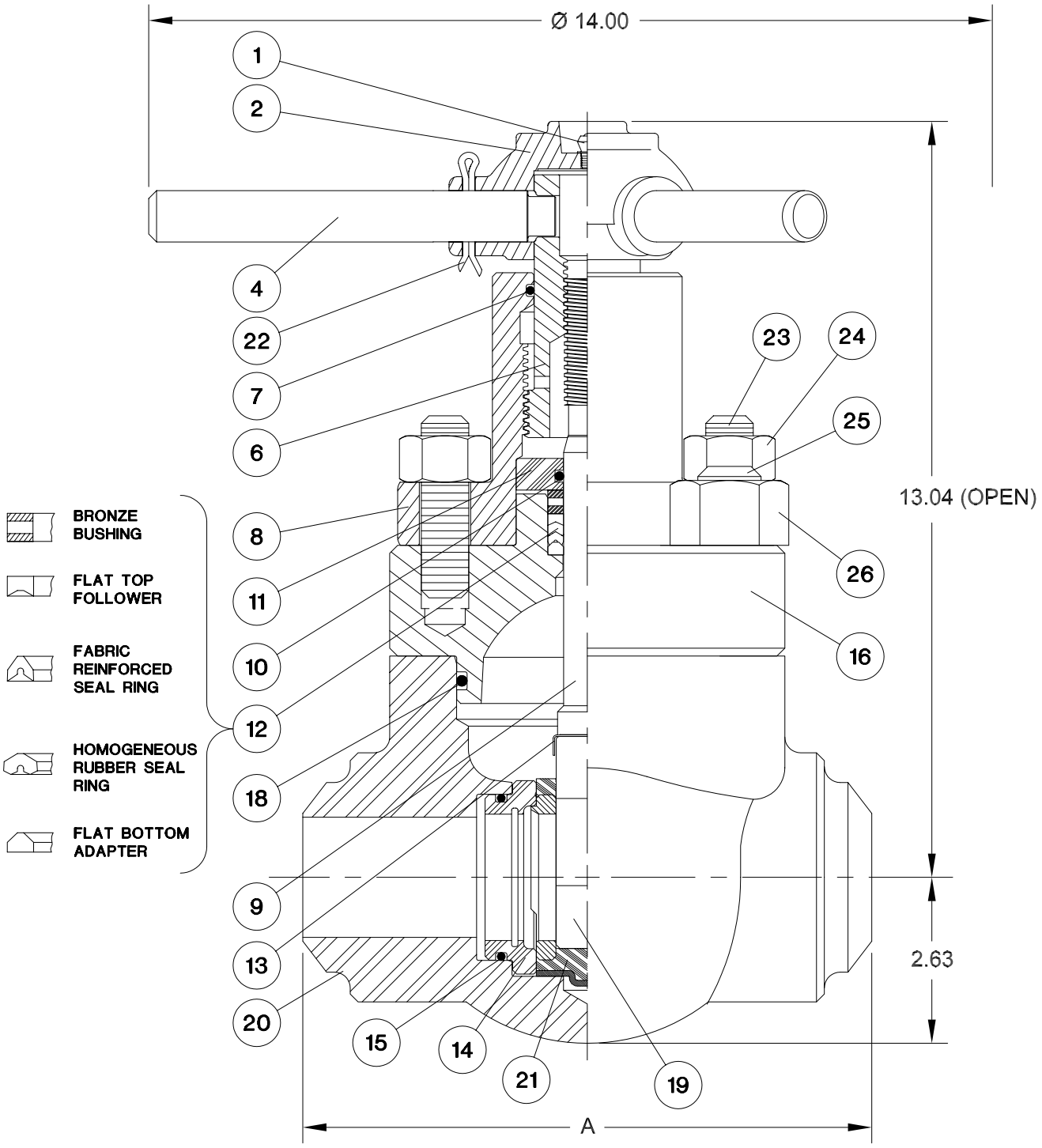

DATA

A - WELD END	9.00
- FLANGED END, SHORT LENGTH	18.38
- FLANGED END, API LENGTH	20.50
VALVE SEAT I.D.	2.00
FOR FLANGED ENDS:	
API RING NUMBER	BX-152
FLANGE ID	2.06
FLANGE OD	7.88
BOLTS, NUMBER - SIZE	8 - .75
NUMBER OF HANDLE TURNS FROM OPEN TO CLOSED	8.60
WEIGHT - WELD END	76 LBS.
- FLANGED END	124 LBS.

ASSEMBLY PART NUMBER

END CONNECTION	FLANGED WELD	3 – 10,000 RTJ 2 – 2.375 O.D. X 1.503 I.D. (2" XXH) 4 – 3.00 O.D. X 2.00 I.D.
BODY CONFIGURATION		5 – Weld 7 – Flanged
STEM MATERIAL		7 – 410 SS 8 – 17–4 PH SS
GATE/WEAR RING MATERIAL		2 – Steel/Steel 7 – 410 SS/410 SS 8 – 17–4 PH SS/410 SS
SEAT RING MATERIAL		1 – 410 SS
SEAT/SEAL ELASTOMER		2 – Viton/Viton 4 – HNBR/HNBR

BASE PART NUMBER

J0XXXXX – X X X X X X 0

Group 1 – Basic valve. Designed in accordance with the methods in API 6A, 17th ed, par 4.3.3. Hydrostatic shell test: 11,250 psi for 3 min. Hydrostatic seat test : 7500 psi for 3 min, each side. Material traceability on body and bonnet.

Group 2 – Same as Group 1 except: Hydrostatic shell test: 11,250 psi for 3 min, drop to 0 psi, 11,250 psi for 15 min. Test is charted. Hydroststic seat test: 7500 psi for 3 min, drop to 0 psi, 7500 psi for 15 min, drop to 0 psi, 300 psi for 5 min, each side. Test is charted. Material traceability on body, bonnet, stem, gate and bolting. Impact tests at or below –50°F on body, bonnet, stem, housing (2" & 3"), packing retainer (4" & 5") and bolting. Surface NDE on body, bonnet and stem.

Group 3 – Same as Group 2 plus volumetric NDE on body and bonnet.

PARTS LIST

	INDEX	REQD	DESCRIPTION / GROUP NUMBER	GROUP 1	GROUP 2	GROUP 3
			ASSEMBLY BASE NUMBER			
			WELD END AND FLANGED END, SHORT LENGTH	J024993	J025077	J025078
			FLANGED END, API LENGTH	J025130		J025131
	1	1	LUBE FITTING STEEL	J005195		
	2	1	HANDLE DUCTILE IRON ASTM A536 GRADE 65–45–12	2139712–01		
	4	1	LOCK HANDLE AISI C1213	J001891		
*	6	1	STEM SCREW AISI C1213	J001913		
*	7	1	HOUSING SEAL BUNA–N	J005526–224		
	8	1	SCREW HOUSING ASTM A350 GRADE LF2 CLASS 1	J024982		
*	9	1	STEM – 410 SS	J024983–107		
			– 17–4 PH SS	2228934–01		
*	10	1	SECONDARY SEAL – VITON	J005531–210		
			– HNBR	2712425–13		
	11	1	PACKING RETAINER AISI C1213	J001940	– – –	
			17–4 PH SS	– – –	J021432	
*	12	1	STEM SEAL ASSEMBLY VITON	J023231–006		
			(WITH BRONZE BUSHING – ASTM B505 ALLOY 93200) HNBR	J023231–008		
	13	1	GATE CLIP AISI 302 SS	M450480		
*	14	2	BODY WEAR RING – FOR STEEL GATE, AISI 4140 w/QPQ NITRIDE COATING	M452267		
			– FOR SS GATE, AISI 410 STAINLESS STEEL	2139647–02		
*	15	2	WEAR RING SEAL – VITON	J005521–229		
			– HNBR	2712425–03		
	16	1	BONNET ASTM A487 GRADE 4 CLASS D	J024985–030	2140428–01	2140341–01
*	18	1	BONNET SEAL – VITON	J005521–342		
			– HNBR	2712425–60		
*	19	1	GATE STEEL AISI 4140 w/QPQ NITRIDE COATING	2171111–01		
			410 SS	2139624–02		
			17–4 PH SS	2228935–01		
	20	1	BODY MATERIALS: WELD END – ASTM A487 GRADE 4 CLASS D FLANGED END – FABRICATED FROM WELD END BODY AND AISI 4130 FLANGES	CONSULT FACTORY FOR BODY PART NUMBERS		
*	21	1	SEAT	2139742–01		
			410 SS/HNBR	RINGS: AISI 410 SS ELASTOMER: HNBR		
			410 SS/VITON	RINGS: AISI 410 SS ELASTOMER: VITON		
	22	1	COTTER PIN STEEL	J005420–18728		
	23	2	HOUSING STUD	J002066	J021436	
			MATERIAL	ASTM A193 GRADE B7	ASTM A193 GRADE L7	
	24	2	HOUSING STUD NUT	2709000–08–01	J053252–034	
			MATERIAL	ASTM A194 GRADE 2H	ASTM A194 GRADE 7	
	25	4	BODY STUD	J015432	J021442	
			MATERIAL	ASTM A193 GRADE B7	ASTM A193 GRADE L7	
	26	4	BODY STUD NUT	2709000–10–01	J053252–038	
			MATERIAL	ASTM A194 GRADE 2H	ASTM A194 GRADE 7	

* Recommended spare parts for one year's service.
Consult factory for part numbers not shown.

CAMERON

DEMCO
3" 7500 WP DM GATE VALVES FOR GENERAL SERVICE

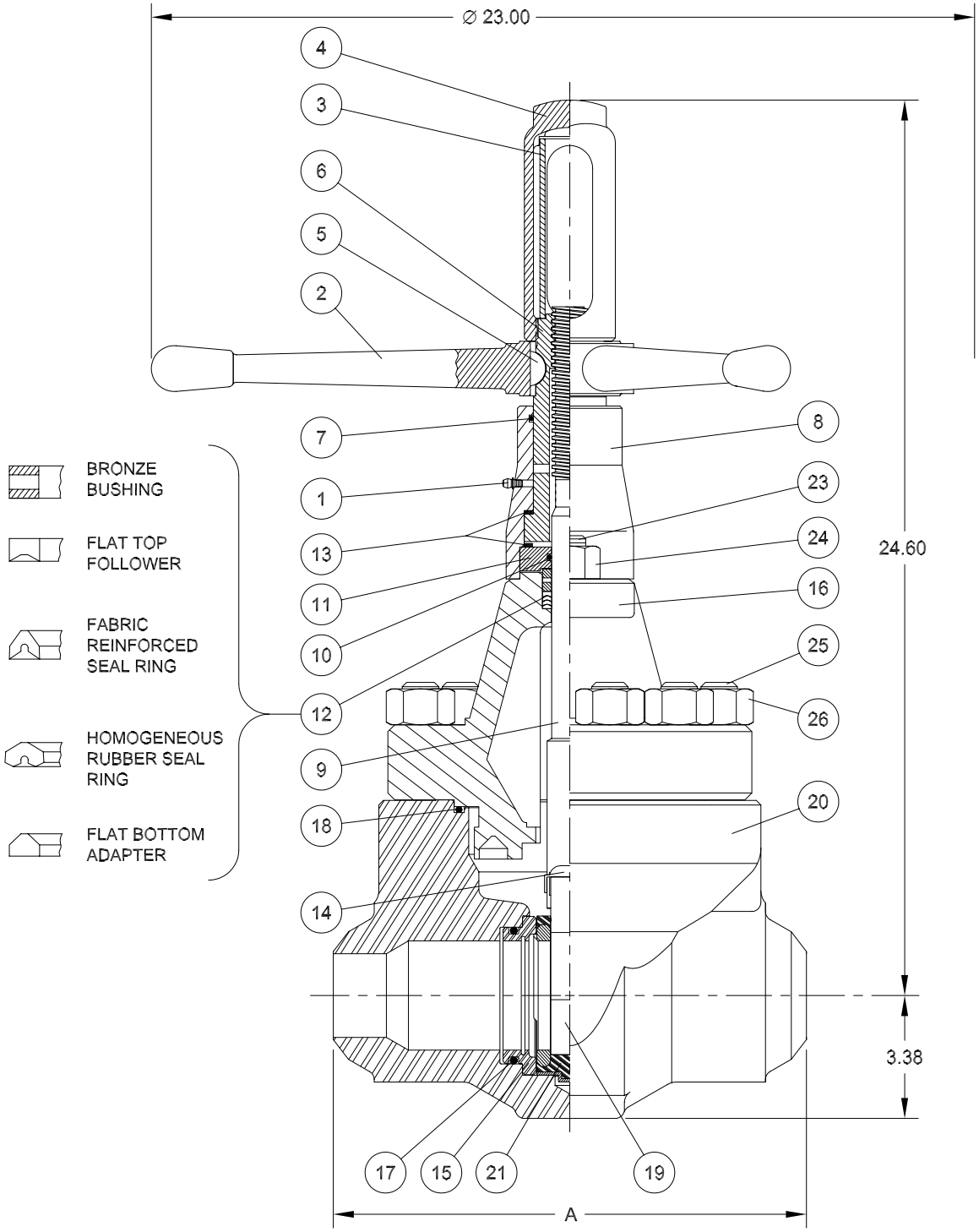

DATA

A – WELD END	13.00
– FLANGED END	24.38
VALVE SEAT I.D.	3.00
FOR FLANGED ENDS: API RING NUMBER FLANGE ID FLANGE OD BOLTS, NUMBER – SIZE	 BX-154 3.06 10.62 8 – 1.00
NUMBER OF HANDLE TURNS FROM OPEN TO CLOSED	16.01
WEIGHT – WELD END	256 LBS.
– FLANGED END	372 LBS.

ASSEMBLY PART NUMBER

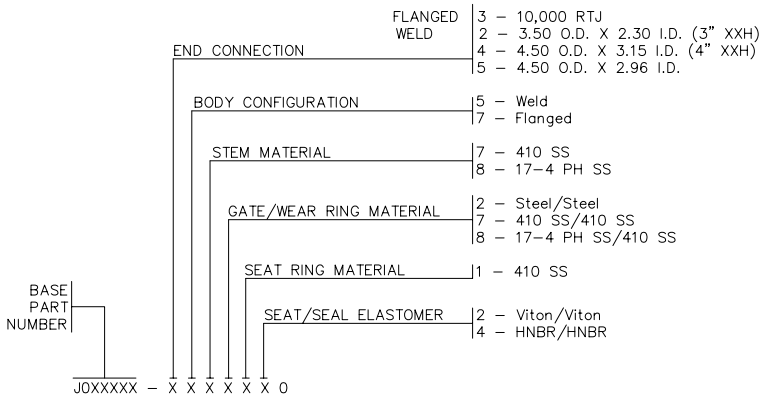

Group 1 – Basic valve. Designed in accordance with the methods in API 6A, 17th ed, par 4.3.3. Hydrostatic shell test: 11,250 psi for 3 min. Hydrostatic seat test : 7500 psi for 3 min, each side. Material traceability on body and bonnet.

Group 2 – Same as Group 1 except: Hydrostatic shell test: 11,250 psi for 3 min, drop to 0 psi, 11,250 psi for 15 min. Test is charted. Hydroststic seat test: 7500 psi for 3 min, drop to 0 psi, 7500 psi for 15 min, drop to 0 psi, 300 psi for 5 min, each side. Test is charted. Material traceability on body, bonnet, stem, gate and bolting. Impact tests at or below –50°F on body, bonnet, stem, housing (2" & 3"), packing retainer (4" & 5") and bolting. Surface NDE on body, bonnet and stem.

Group 3 – Same as Group 2 plus volumetric NDE on body and bonnet.

PARTS LIST

	INDEX	REQD	DESCRIPTION / GROUP NUMBER	GROUP 1	GROUP 2	GROUP 3
			ASSEMBLY BASE NUMBER	J025051	J025079	J025080
	1	1	LUBE FITTING STEEL	J005195		
	2	1	HANDLE DUCTILE IRON ASTM A536 GRADE 65–45–12	2139481–01		
	3	1	STEM TUBE CLEAR ACRYLIC	J007459		
	4	1	STEM CAP DUCTILE IRON ASTM A536 GRADE 65–45–12	J007411		
	5	1	KEY STEEL	J005305–10016		
*	6	1	STEM SCREW AISI C1213	J007416		
*	7	1	HOUSING SEAL BUNA–N	J005526–226		
	8	1	HOUSING ASTM A350 GRADE LF2 CLASS 1	J007418	J021448–040	
			MATERIALS	AISI C1029 NORMALIZED	ASTM A352 GRADE LCC	
*	9	1	STEM – 410 SS	J024951–107		
			– 17–4 PH SS	2228936–01		
*	10	1	SECONDARY SEAL – VITON	J005531–214		
			– HNBR	2712425–01		
	11	1	PACKING RETAINER	J007413	J021434	
			MATERIALS	AISI C1213	17–4 PH SS	
*	12	1	STEM SEAL ASSEMBLY VITON	J001951–006		
			(WITH BRONZE BUSHING – SAE 660) HNBR	J001951–008		
*	13	2	BEARING TEFLON/PHENOLIC	J007426		
	14	1	GATE CLIP AISI 302 SS	M450505		
*	15	2	BODY WEAR RING FOR STEEL GATE	M452571		
			MATERIAL	AISI 4140 w/QPQ NITRIDE COATING		
			FOR SS GATE	2139648–02		
			MATERIAL	AISI 410 STAINLESS STEEL		
	16	1	BONNET ASTM A487 GRADE 4 CLASS D	J017289–029	2140370–01	2140370–02
*	17	2	WEAR RING SEAL – VITON	J005521–340		
			– HNBR	2712783–03		
*	18	1	BONNET SEAL – VITON	J005521–361		
			– HNBR	2712787–07		
*	19	1	GATE – STEEL/QPQ AISI 4140 w/QPQ NITRIDE COATING	2171112–01		
			410 SS	2139628–02		
			17–4 PH SS	J024952–008		
	20	1	BODY MATERIALS: WELD END – ASTM A487 GRADE 4 CLASS D; FLANGED END – FABRICATED FROM WELD END BODY AND AISI 4130 FLANGES	CONSULT FACTORY FOR BODY PART NUMBERS		
*	21	1	SEAT 410 SS/HNBR	2139744–01		
			MATERIAL	RINGS: AISI 410 SS; ELASTOMER: HNBR		
			410 SS/VITON			
			MATERIAL	RINGS: AISI 410 SS; ELASTOMER: VITON		
	23	2	HOUSING STUD	J002072	J021441	
			MATERIAL	ASTM A193 GRADE B7	ASTM A193 GRADE L7	
	24	2	HOUSING STUD NUT	2709000–09–01	J053252–036	
			MATERIAL	ASTM A194 GRADE 2H	ASTM A194 GRADE 7	
	25	12	BODY STUD	J015432	J021442	
			MATERIAL	ASTM A193 GRADE B7	ASTM A193 GRADE L7	
	26	12	BODY STUD NUT	2709000–10–01	J053252–038	
			MATERIAL	ASTM A194 GRADE 2H	ASTM A194 GRADE 7	

* Recommended spare parts for one year's service.
Consult factory for part numbers not shown.

CAMERON

DEMCO
4" 7500 WP DM GATE VALVES FOR GENERAL SERVICE

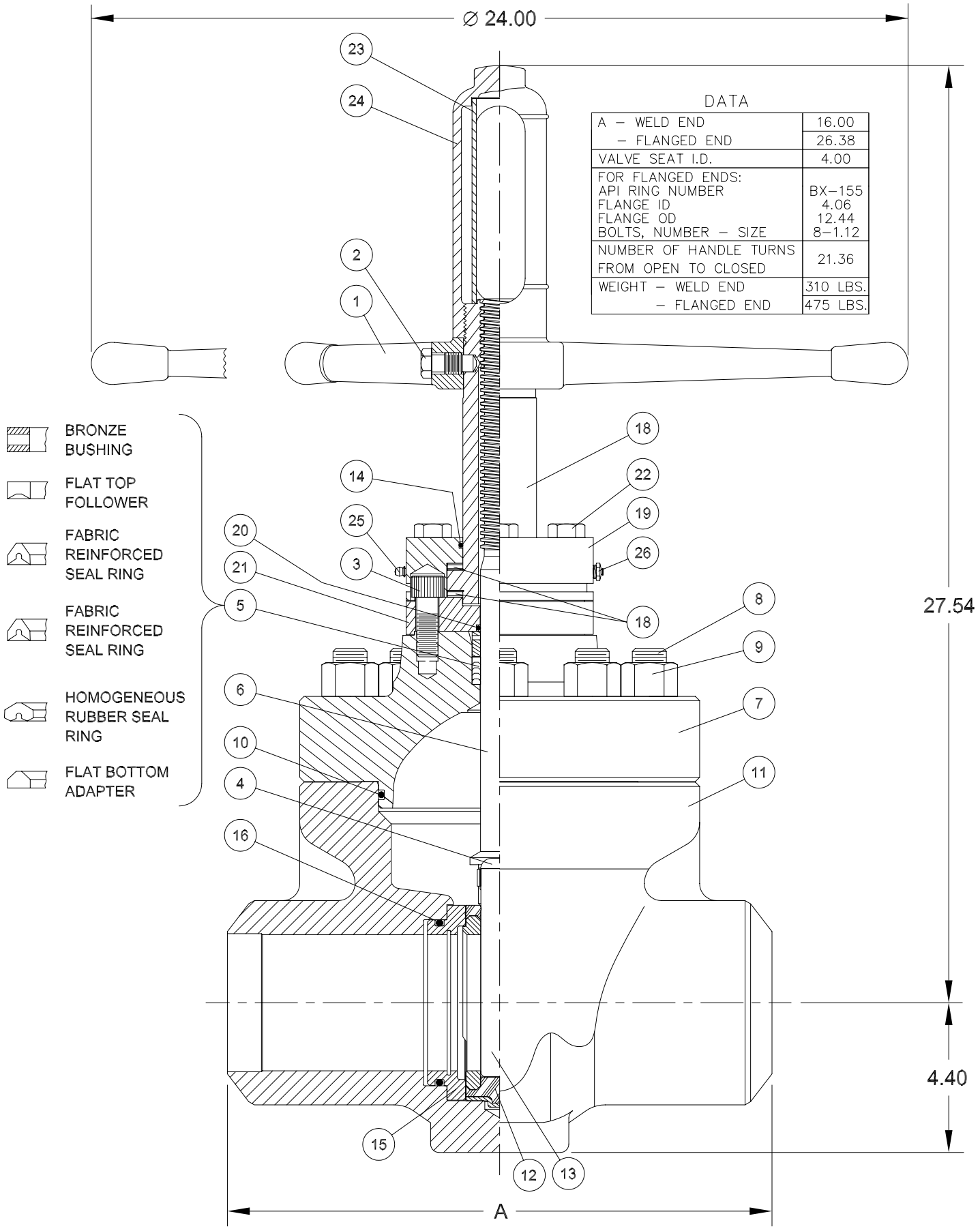

DATA

A – WELD END	16.00
– FLANGED END	26.38
VALVE SEAT I.D.	4.00
FOR FLANGED ENDS: API RING NUMBER FLANGE ID FLANGE OD BOLTS, NUMBER – SIZE	 BX–155 4.06 12.44 8–1.12
NUMBER OF HANDLE TURNS FROM OPEN TO CLOSED	21.36
WEIGHT – WELD END	310 LBS.
– FLANGED END	475 LBS.

ASSEMBLY PART NUMBER

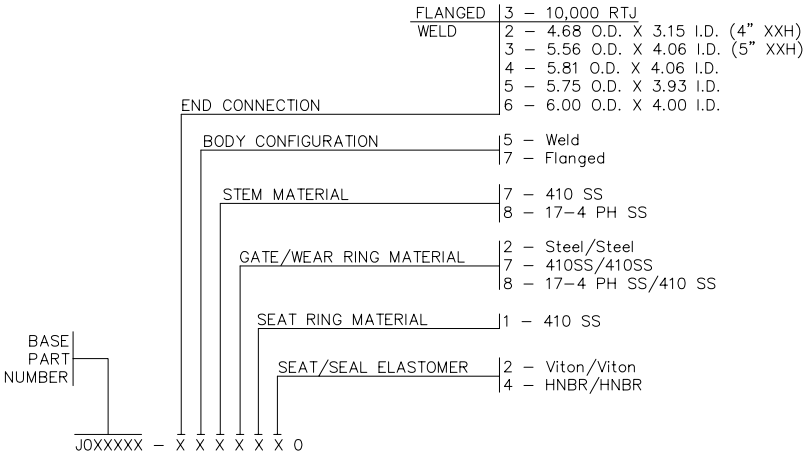

Group 1 – Basic valve. Designed in accordance with the methods in API 6A, 17th ed, par 4.3.3. Hydrostatic shell test: 11,250 psi for 3 min. Hydrostatic seat test : 7500 psi for 3 min, each side. Material traceability on body and bonnet.

Group 2 – Same as Group 1 except: Hydrostatic shell test: 11,250 psi for 3 min, drop to 0 psi, 11,250 psi for 15 min. Test is charted. Hydroststic seat test: 7500 psi for 3 min, drop to 0 psi, 7500 psi for 15 min, drop to 0 psi, 300 psi for 5 min, each side. Test is charted. Material traceability on body, bonnet, stem, gate and bolting. Impact tests at or below –50°F on body, bonnet, stem, housing (2" & 3"), packing retainer (4" & 5") and bolting. Surface NDE on body, bonnet and stem.

Group 3 – Same as Group 2 plus volumetric NDE on body and bonnet.

PARTS LIST

	INDEX	REQD	DESCRIPTION / GROUP NUMBER	GROUP 1	GROUP 2	GROUP 3
			ASSEMBLY BASE NUMBER	J025100	J025101	J025081
	1	1	HANDWHEEL Ductile Iron ASTM A536 Grade 65–45–12	2227656–01		
	2	1	HANDWHEEL SCREW AISI C1018	J014832		
	3	4	RETAINER SCREW	J005665–32028	J005666–32028	
			Material	Alloy Steel	18–8 SS	
	4	1	GATE CLIP AISI 302 SS	M450505		
*	5	1	STEM SEAL ASSEMBLY Viton	J015853–006		
			with Bronze Bushing ASTM B271 Alloy C95500 HNBR	J015853–008		
*	6	1	STEM 410 SS	2140684–01		
			17–4 PH SS	2228937–01		
	7	1	BONNET ASTM A487 Grade 4 Class D	2172523–01	2172523–02	2172523–03
	8	10	BODY STUD	2171976–11–01	2171978–11–01	
			Material	ASTM A193 Grade B7	ASTM A193 Grade L7	
	9	10	BODY STUD NUT	2709000–11–01	2709000–11–21	
			Material	ASTM A194 Grade 2H	ASTM A194 Grade 7	
*	10	1	BONNET SEAL – VITON Viton	J005521–364		
			– HNBR HNBR	2712426–11		
	11	1	BODY MATERIALS: WELD END: ASTM A 487 GRADE 4 CLASS D FLANGED END: FABRICATED FROM WELD END BODY AND AISI 4130 FLANGES	CONSULT FACTORY FOR BODY PART NUMBERS		
*	12	1	SEAT 410 SS/HNBR	2139746–01		
			Material	Rings: AISI 410 Stainless Steel Elastomer: HNBR		
			410 SS/Viton			
			Material	Rings: AISI 410 Stainless Steel Elastomer: Viton		
*	13	1	GATE – STEEL/QPQ AISI 4140 with QPQ Nitride coating	2171267–01		
			410 SS	2139637–02		
			17–4 PH SS	2228938–01		
*	14	1	HOUSING SEAL Buna–N	J005526–228		
*	15	2	BODY WEAR RING For Steel Gate	M452290		
			Material	AISI 4140 with QPQ Nitride coating		
			For Stainless Steel Gate	2139649–02		
			Material	AISI 410 Stainless Steel		
*	16	2	WEAR RING SEAL Viton	J005521–349		
			HNBR	2712787–04		
*	18	1	STEM SCREW WITH BEARINGS	J023888		
			Material	Stem Screw: AISI C1018 Bearings: Hardened steel needle thrust bearings		
	19	1	HOUSING AISI C1018	J015332		
*	20	1	SECONDARY SEAL Viton	J005531–216		
			HNBR	2726268–01		
	21	1	PACKING RETAINER	J015330	2172425–02	
			Material	AISI C1018	AISI 316SS	
	22	4	HOUSING SCREW Steel, SAE Grade 5	702500–14–00–34		
	23	1	STEM TUBE Clear Acrylic	J012852		
	24	1	STEM CAP Ductile Iron	J015855		
	25	1	LUBE FITTING Steel	J005195		
	26	1	RELIEF FITTING Steel	J051971		

*Recommended spare parts for one year's service.
Consult factory for part numbers not shown.

CAMERON

DEMCO

5-1/8" 7500 WP DM GATE VALVES FOR GENERAL SERVICE

G-41
3-9-06
SHEET 1 OF 2

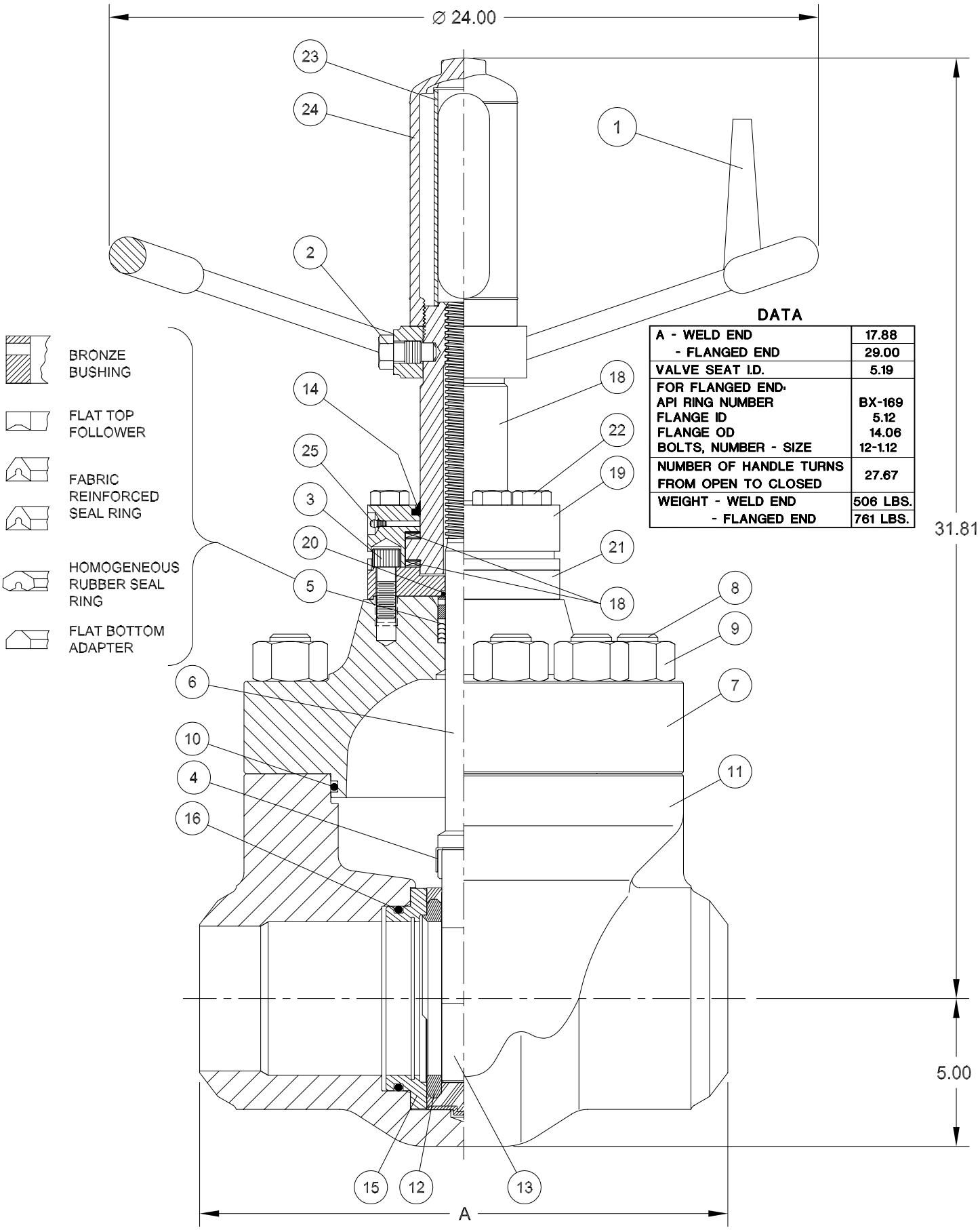

DATA

A - WELD END	17.88
- FLANGED END	29.00
VALVE SEAT I.D.	5.19
FOR FLANGED END:	
API RING NUMBER	BX-169
FLANGE ID	5.12
FLANGE OD	14.06
BOLTS, NUMBER - SIZE	12-1.12
NUMBER OF HANDLE TURNS FROM OPEN TO CLOSED	27.67
WEIGHT - WELD END	506 LBS.
- FLANGED END	761 LBS.

ASSEMBLY PART NUMBER

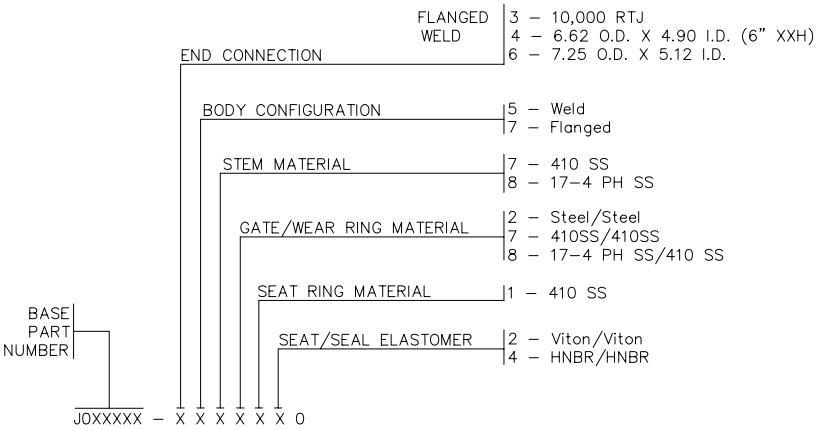

Group 1 – Basic valve. Designed in accordance with the methods in API 6A, 17th ed, par 4.3.3. Hydrostatic shell test: 11,250 psi for 3 min. Hydrostatic seat test : 7500 psi for 3 min, each side. Material traceability on body and bonnet.

Group 2 – Same as Group 1 except: Hydrostatic shell test: 11,250 psi for 3 min, drop to 0 psi, 11,250 psi for 15 min. Test is charted. Hydroststic seat test: 7500 psi for 3 min, drop to 0 psi, 7500 psi for 15 min, drop to 0 psi, 300 psi for 5 min, each side. Test is charted. Material traceability on body, bonnet, stem, gate and bolting. Impact tests at or below –50°F on body, bonnet, stem, housing (2" & 3"), packing retainer (4" & 5") and bolting. Surface NDE on body, bonnet and stem.

Group 3 – Same as Group 2 plus volumetric NDE on body and bonnet.

PARTS LIST

	INDEX	REQD	DESCRIPTION / GROUP NUMBER		GROUP 1	GROUP 2	GROUP 3
			ASSEMBLY BASE NUMBER		J024994	J025083	J025084
	1	1	HANDWHEEL	Ductile Iron ASTM A536 Grade 65–45–12	J016986		
	2	1	HANDWHEEL SCREW	AISI C1018	J016987		
	3	4	RETAINER SCREW		J005665–32028	J005666–32028	
				Material	Alloy Steel	18–8 SS	
	4	1	GATE CLIP	AISI 302 SS	M451649		
*	5	1	STEM SEAL ASSEMBLY	Viton	J016995–006		
			with Bronze Bushing ASTM B271 Alloy C95500	HNBR	J016995–008		
*	6	1	STEM	410 SS	J024943–107		
				17–4 PH SS	2228939–01		
	7	1	BONNET	ASTM A487 Grade 4 Class D	J024956–030	J024956–051	J024956–052
	8	12	BODY STUD		2171976–12–01	2171978–12–02	
				Material	ASTM A193 Grade B7	ASTM A193 Grade L7	
	9	12	BODY STUD NUT		2709000–12–01	J053252–142	
				Material	ASTM A194 Grade 2H	ASTM A194 Grade 7	
*	10	1	BONNET SEAL – VITON	Viton	J005521–446		
			– HNBR	HNBR	2712425–78		
	11	1	BODY MATERIALS: WELD END: ASTM A 487 GRADE 4 CLASS D FLANGED END: FABRICATED FROM WELD END BODY AND AISI 4130 FLANGES OR FROM CASTING, ASTM A487 GRADE 4 CALSS D		CONSULT FACTORY FOR BODY PART NUMBERS		
*	12	1	SEAT	410 SS/HNBR	2139748–01		
				Material	Rings: AISI 410 Stainless Steel Elastomer: HNBR		
				410 SS/Viton			
				Material	Rings: AISI 410 Stainless Steel Elastomer: Viton		
*	13	1	GATE – STEEL/QPQ	AISI 4140 with QPQ Nitride coating	2171108–01		
				410 SS	2139629–02		
				17–4 PH SS	J024957–008		
*	14	1	HOUSING SEAL	Urethane	2726191–02–95		
*	15	2	BODY WEAR RING	For Steel Gate	M452619		
				Material	AISI 4140 with QPQ Nitride coating		
				For Stainless Steel Gate	2139650–02		
				Material	AISI 410 Stainless Steel		
*	16	2	WEAR RING SEAL	Viton	J005521–435		
				HNBR	2726268–02		
*	18	1	STEM SCREW WITH BEARINGS		J023848		
				Material	Stem Screw: AISI C1018 Bearings: Hardened steel needle thrust bearings		
	19	1	HOUSING	AISI C1018	J018190		
*	20	1	SECONDARY SEAL	Viton	J005531–218		
				HNBR	2712424–12		
	21	1	PACKING RETAINER		J018191	2171930–01	
				Material	AISI C1018	AISI 4130	
	22	4	HOUSING SCREW	Steel, SAE Grade 5	702500–16–00–40		
	23	1	STEM TUBE	Clear Acrylic	J018192		
	24	1	STEM CAP	Ductile Iron	J018193		
	25	1	LUBE FITTING	Steel	J005195		

* Recommended spare parts for one year's service. Consult factory for part numbers not shown.

CAMERON

DEMCO

SERIES DT GATE VALVES
3" CLASS 600, 900 AND 1500
FOR NACE COMPLIANT SERVICE

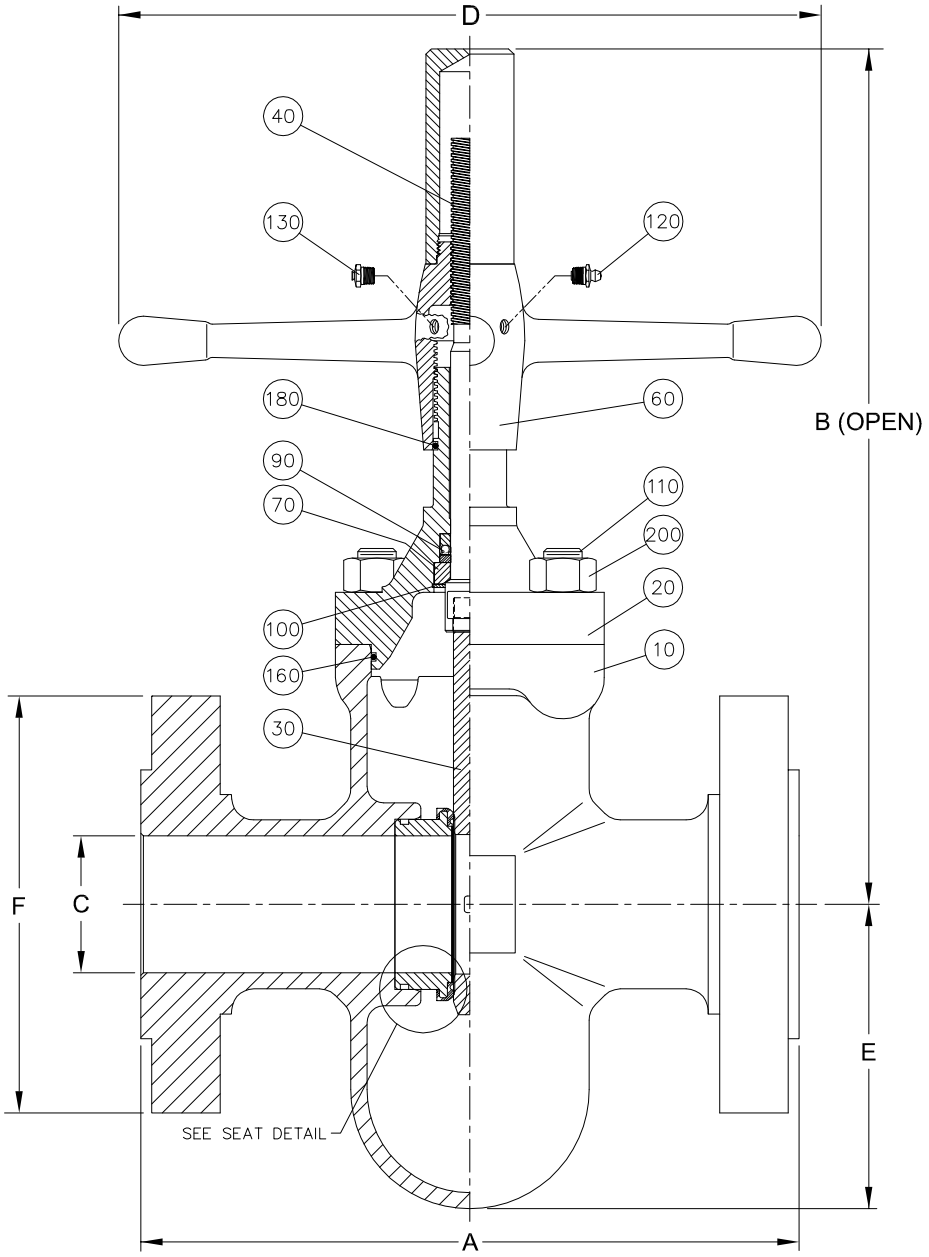

DIMENSIONAL DATA AND WEIGHTS

DIMENSION \ VALVE SIZE	3"		
CLASS	600	900	1500
A – THREADED	---	9.69	---
– FLANGED – RF	14.00	15.00	18.50
– RTJ	14.12	15.12	18.62
B (OPEN)	19.50		20.31
C (SEAT BORE)	3.12		
D	14.75		18.00
E	6.81	6.94	7.15
F (FLANGE DIAMETER)	8.25	9.50	10.50
FLANGE BOLTS (QTY. – SIZE)	8 – 3/4	8 – 7/8	8 – 1-1/8
RING NUMBER (RTJ)	R31		R35
WEIGHT (LB.) – THREADED	---	75	---
– FLANGED	100	125	185

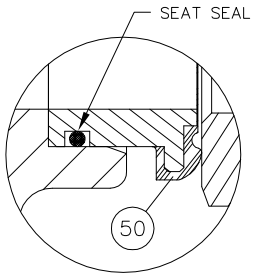

SEAT ASSEMBLY DETAIL
PC BUNA, FKM, HNBR
SEAT SEAL PART OF SEAT ASSEMBLY

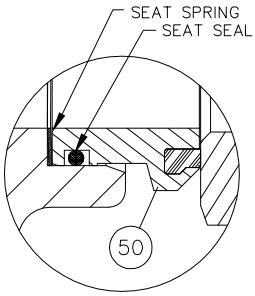

SEAT ASSEMBLY DETAIL
P–10
SEAT SPRING AND SEAL
PART OF SEAT ASSEMBLY

WORKING PRESSURE (PSI)

CLASS 600	CLASS 900	CLASS 1500
1480	2220	3705

ASSEMBLY PART NUMBER

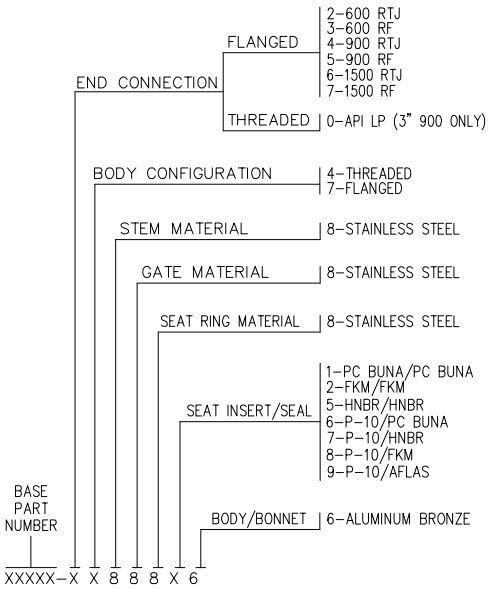

PARTS LIST

INDEX	REQD.	DESCRIPTION \ PRESSURE		3" 600	3" 900	3" 1500	MATERIAL SPECIFICATION (See Note 1.)
		ASSEMBLY BASE NUMBER		J025003	J025004	J025005	
10	1	BODY		CONSULT FACTORY FOR BODY PART NUMBERS			ALUMINUM BRONZE ASTM B148 ALLOY 955
20	1	BONNET		J024624–006		J024642–006	ALUMINUM BRONZE ASTM B148 ALLOY 955
30	1	GATE	1, 2, 5	J024621–008			STAINLESS STEEL CF8M
		(See Note 2.)	6, 7, 8, 9	J024623–008			
40	1	STEM		J024620–008		J024820–008	316 SS
50	2	SEAT ASSEMBLY	1	2061588–03			RING: CF8M; ELASTOMER: BUNA–N PEROXIDE CURED, 90 DURO
		(See Note 2.)	2	2061589–03			RING: CF8M; ELASTOMER: FKM, 75 DURO
			5	CONSULT FACTORY FOR SEAT ASSY PART NUMBERS			RING: CF8M; ELASTOMER: HNBR, PEROXIDE CURED, 80 DURO
			6	2061590–03			RING: CF8M; INSERT: PEEK; SEAL: BUNA–N PEROXIDE CURED, 90 DURO SPRING: INCONEL X–750
			7	CONSULT FACTORY FOR SEAT ASSY PART NUMBERS			RING: CF8M; INSERT: PEEK; SEAL: HNBR, 90 DURO SPRING: INCONEL X–750
			8	CONSULT FACTORY FOR SEAT ASSY PART NUMBERS			RING: CF8M; INSERT: PEEK; SEAL: FKM, 90 DURO SPRING: INCONEL X–750
			9	CONSULT FACTORY FOR SEAT ASSY PART NUMBERS			RING: CF8M; INSERT: PEEK; SEAL: AFLAS, 90 DURO; SPRING: INCONEL X–750
60	1	HANDLE		2139931–01		2139932–01	DUCTILE IRON ASTM A536 GRADE 65–45–12
70	1	STEM PACKING RETAINER		2060259–08			316 SS
90	1	STEM SEAL ASSEMBLY		J024882–603			FILLED PTFE/ELGILOY
100	1	RETAINER SNAP RING		J090066–162			PH 15–7 Mo
110	4	STUD		219066–09–03–21		219066–10–03–61	ASTM A193 B7M/ZINC PLATED
120	1	LUBE FITTING		005929–18			STEEL
130	1	RELIEF FITTING		2726258–01			STEEL
160	1	BONNET SEAL	1, 6	J005520–244			BUNA–N, PEROXIDE CURED, 90 DURO
		(See Note 2.)	2, 8	J005521–244			FKM, 90 DURO
			5, 7	CONSULT FACTORY FOR BONNET SEAL PART NUMBERS			HNBR, 90 DURO
			9	2788035–07			AFLAS
180	1	HANDLE SEAL		J005526–221			BUNA–N
200	4	NUT		2709000–09–11		2709000–10–11	ASTM A194 2HM/ZINC PLATED

NOTES:
1. CF8M IS ASTM A351 GRADE CF8M ANNEALED. 316 SS IS AISI TYPE 316 SS ANNEALED.
2. THESE PARTS ARE KEYED TO THE ASSEMBLY PART NUMBER "SEAT INSERT/SEAL" CODE NUMBERS INDICATED.

CAMERON

DEMCO
SERIES DT GATE VALVES
2-1/2" CLASS 600, 900 AND 1500
FOR NACE COMPLIANT SERVICE

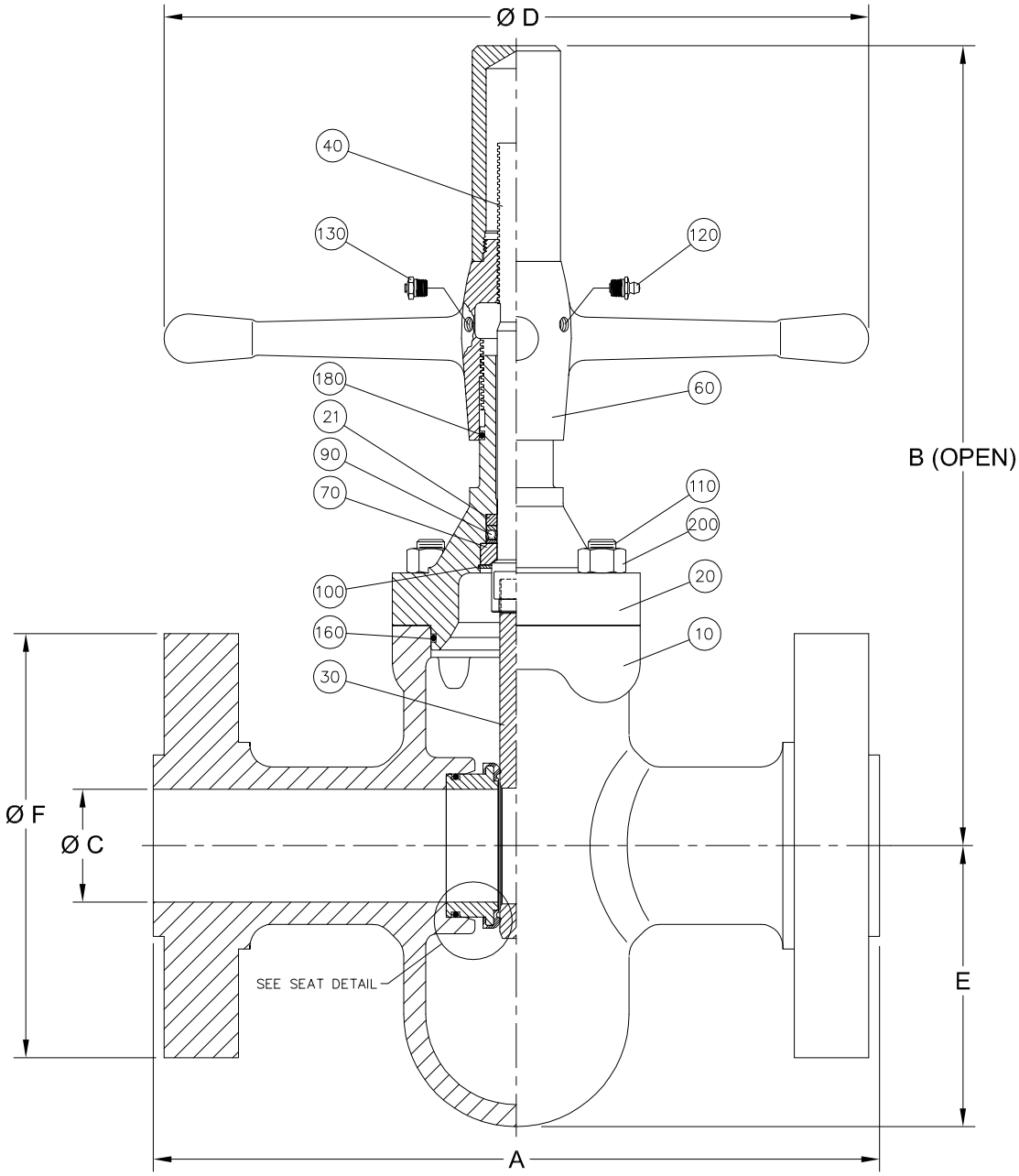

DIMENSIONAL DATA AND WEIGHTS

DIMENSION \ VALVE SIZE	2-1/2"		
CLASS	600	900	1500
A – THREADED	8.75		
– FLANGED – RF	13.00	16.50	
– RTJ	13.12	16.62	
B (OPEN) –BRONZE	18.18		
–SS	18.18	19.42	
C (SEAT BORE)	2.56		
D	14.75		
E	6.12	6.38	
F (FLANGE DIAMETER)	7.50	9.62	
FLANGE BOLTS (QTY. – SIZE)	8 – 3/4	8 – 1	
RING NUMBER (RTJ)	R26	R27	
WEIGHT (LB.) – THREADED	---	57	
– FLANGED	77	110	

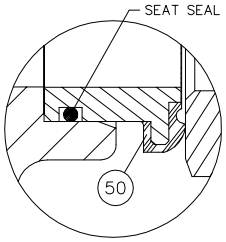

SEAT ASSEMBLY DETAIL
PC BUNA, FKM, HNBR
SEAT SEAL PART OF SEAT ASSEMBLY

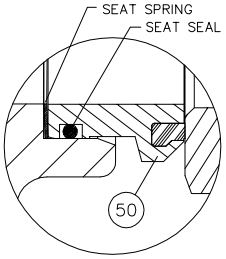

SEAT ASSEMBLY DETAIL
P-10
SEAT SPRING AND SEAL
PART OF SEAT ASSEMBLY

WORKING PRESSURE (PSI)

END CONNECTION	MATERIAL	CLASS 600	CLASS 900	CLASS 1500
THREADED	BRONZE	1480	2220	3705
	STAINLESS STEEL			
FLANGED	BRONZE	1480	2220	3705
	STAINLESS STEEL	1440	2160	3600

ASSEMBLY PART NUMBER

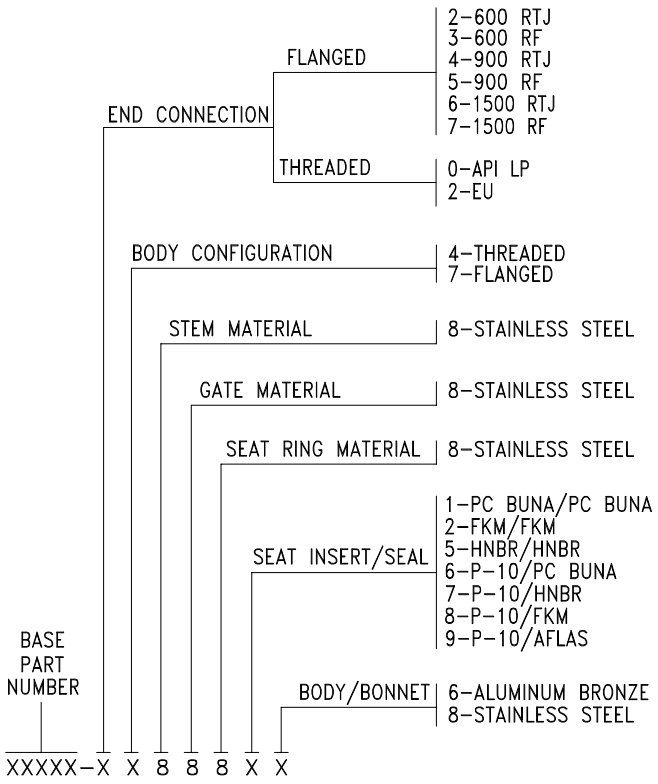

PARTS LIST

INDEX	REQD.	DESCRIPTION \ PRESSURE		2–1/2" 600	2–1/2" 900/1500	MATERIAL SPECIFICATION (See Note 1.)
		ASSEMBLY BASE NUMBER		J025000	J025001/J025002	
10	1	BODY		CONSULT FACTORY FOR BODY PART NUMBERS		ALUMINUM BRONZE ASTM B148 ALLOY 955 STAINLESS STEEL CF8M
20	1	BONNET	ALUMINUM BRONZE	2139015–11	2139020–11	ALUMINUM BRONZE ASTM B148 ALLOY 955
			STAINLESS STEEL	2139015–12	2061920–01	STAINLESS STEEL CF8M
21	1	STEM BUSHING (f/SS BONNET)		J024676–060		BRONZE ASTM B150 ALLOY C63000
30	1	GATE	1, 2, 5	2060265–01		STAINLESS STEEL CF8M
		(See Note 2.)	6, 7, 8, 9	2060266–01		
40	1	STEM – f/ALUMINUM BRONZE VALVE		2060256–02		316 SS
		– f/STAINLESS STEEL VALVE		2060256–02	2061921–01	
50	2	SEAT ASSEMBLY	1	2061588–02		RING: CF8M; ELASTOMER: BUNA–N PEROXIDE CURED, 90 DURO
		(See Note 2.)	2	2061589–02		RING: CF8M; ELASTOMER: FKM, 75 DURO
			5	CONSULT FACTORY FOR SEAT ASSY PART NUMBERS		RING: CF8M; ELASTOMER: HNBR, PEROXIDE CURED, 80 DURO
			6	2061590–02		RING: CF8M; INSERT: PEEK; SEAL: BUNA–N PEROXIDE CURED, 90 DURO SPRING: INCONEL X–750
			7	CONSULT FACTORY FOR SEAT ASSY PART NUMBERS		RING: CF8M; INSERT: PEEK; SEAL: HNBR, 90 DURO SPRING: INCONEL X–750
			8	CONSULT FACTORY FOR SEAT ASSY PART NUMBERS		RING: CF8M; INSERT: PEEK; SEAL: FKM, 90 DURO SPRING: INCONEL X–750
			9	CONSULT FACTORY FOR SEAT ASSY PART NUMBERS		RING: CF8M; INSERT: PEEK; SEAL: AFLAS, 90 DURO SPRING: INCONEL X–750
60	1	HANDLE		2227862–01		DUCTILE IRON ASTM A536 GRADE 65–45–12
70	1	STEM PACKING RETAINER		2060259–08		316 SS
90	1	STEM SEAL ASSEMBLY		J024882–603		TEFLON/ELGILOY
100	1	RETAINER SNAP RING		J090066–162		PH 15–7 Mo
110	4	STUD		219066–07–02–21	219066–09–03–21	ASTM A193 B7M/ZINC PLATED
120	1	LUBE FITTING		005929–18		STEEL
130	1	VENT FITTING		2726258–01		STEEL
160	1	BONNET SEAL	1, 6	J005520–239		BUNA–N, PEROXIDE CURED, 90 DURO
		(See Note 2.)	2, 8	J005521–239		FKM, 90 DURO
			5, 7	2712425–08		HNBR, 90 DURO
			9	2788035–08		AFLAS
180	1	HANDLE SEAL		J005526–221		BUNA–N
200	4	NUT		2709000–07–11	2709000–09–11	ASTM A194 2HM/ZINC PLATED

NOTES:
1. CF8M IS ASTM A351 GRADE CF8M ANNEALED. 316 SS IS AISI TYPE 316 SS ANNEALED.
2. THESE PARTS ARE KEYED TO THE ASSEMBLY PART NUMBER "SEAT INSERT/SEAL" CODE NUMBERS INDICATED.

CAMERON

DEMCO

SERIES DT GATE VALVES
2" CLASS 600, 900 AND 1500
FOR NACE COMPLIANT SERVICE

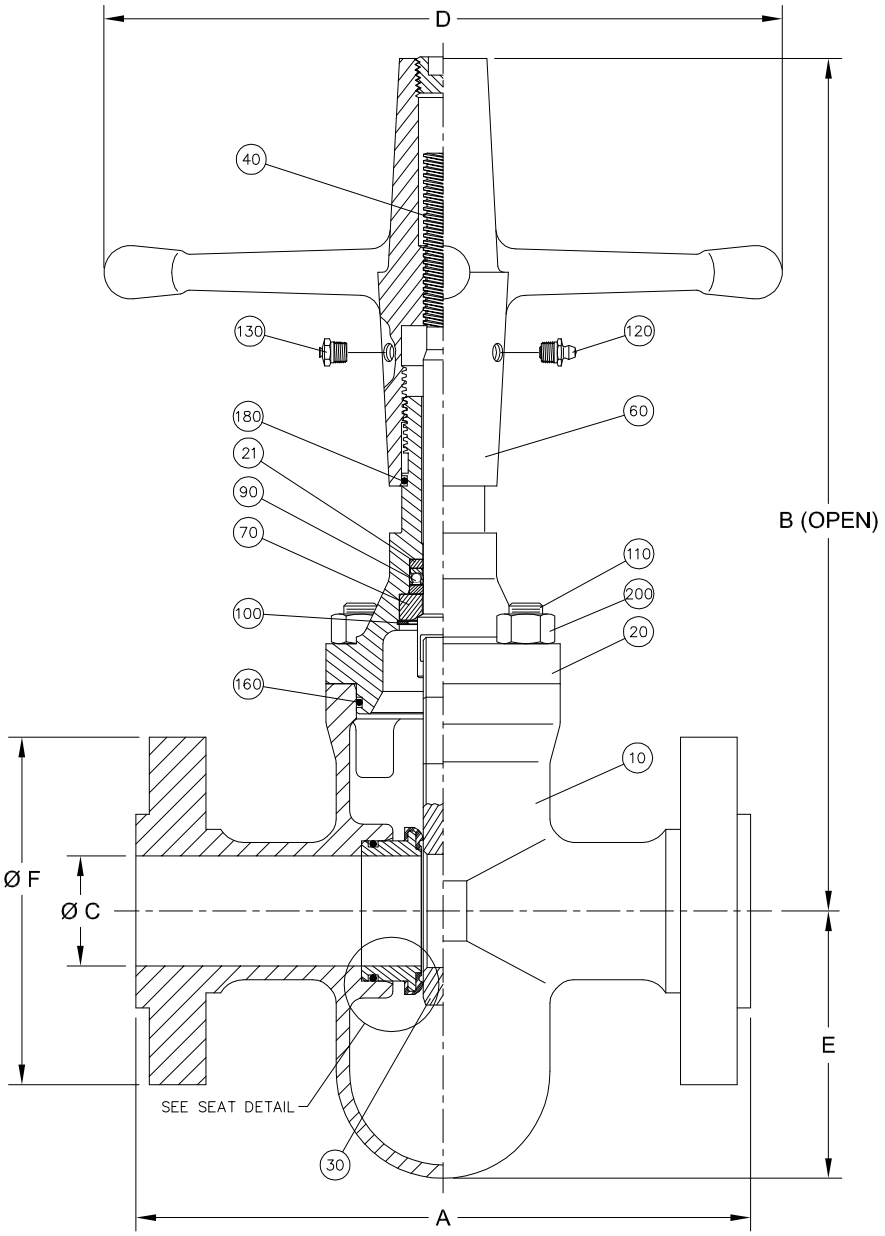

DIMENSIONAL DATA AND WEIGHTS

DIMENSION \ VALVE SIZE / CLASS	2"		
	600	900	1500
A – THREADED	8.50		
– FLANGED – RF	11.50	14.50	
– RTJ	11.62	14.62	
B (OPEN)	15.54		
C (SEAT BORE)	2.06		
D	14.50		
E	5.00	5.25	
F (FLANGE DIAMETER)	6.50	8.50	
FLANGE BOLTS (QTY. – SIZE)	8 – 5/8	8 – 7/8	
RING NUMBER (RTJ)	R23	R24	
WEIGHT (LB.) – THREADED	---	44	
– FLANGED	48	82	

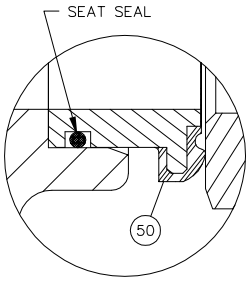

SEAT ASSEMBLY DETAIL
PC BUNA, FKM, HNBR
SEAT SEAL PART OF SEAT ASSEMBLY

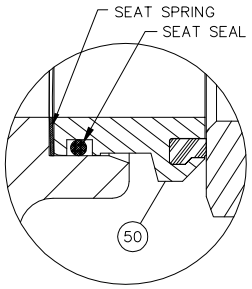

SEAT ASSEMBLY DETAIL
P–10
SEAT SPRING AND SEAL
PART OF SEAT ASSEMBLY

WORKING PRESSURE (PSI)

END CONNECTION	MATERIAL	CLASS 600	CLASS 900	CLASS 1500
THREADED	BRONZE	1480	2220	3705
	STAINLESS STEEL			
FLANGED	BRONZE	1480	2220	3705
	STAINLESS STEEL	1440	2160	3600

ASSEMBLY PART NUMBER

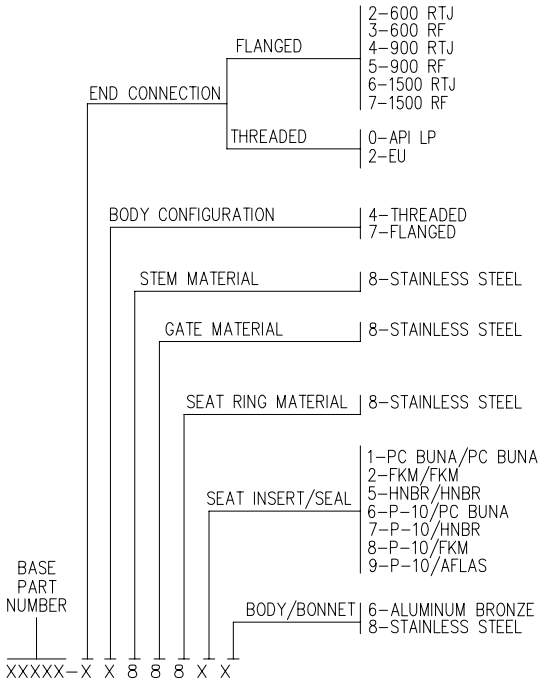

PARTS LIST

INDEX	REQD.	DESCRIPTION \ PRESSURE	2" 600	2" 900/1500	MATERIAL SPECIFICATION (See Note 1.)
		ASSEMBLY BASE NUMBER	J024997	J024998/J024999	
10	1	BODY	CONSULT FACTORY FOR BODY PART NUMBERS		ALUMINUM BRONZE ASTM B148 ALLOY 955 STAINLESS STEEL CF8M
20	1	BONNET	2060241-11	J024323-060	ALUMINUM BRONZE ASTM B148 ALLOY 955
			2060241-12	J024660-080	STAINLESS STEEL CF8M
21	1	STEM BUSHING (f/SS BONNET)	J024661-060		BRONZE ASTM B505 ALLOY 93200
30	1	GATE 1, 2, 5	J024558-008		STAINLESS STEEL CF8M
		(See Note 2.) 6, 7, 8, 9	J024559-008		
40	1	STEM	J024089-008		316 SS
50	2	SEAT ASSEMBLY 1	2061588-01		RING: CF8M; ELASTOMER: BUNA-N PEROXIDE CURED, 90 DURO
		(See Note 2.) 2	2061589-01		RING: CF8M; ELASTOMER: FKM, 75 DURO
		5	2227057-01		RING: CF8M; ELSATOMER: HNBR, PEROXIDE CURED, 80 DURO
		6	2061590-01		RING: CF8M; INSERT: PEEK; SEAL: BUNA-N PEROXIDE CURED, 90 DURO SPRING: INCONEL X-750
		7	2227058-01		RING: CF8M; INSERT: PEEK; SEAL: HNBR, 90 DURO SPRING: INCONEL X-750
		8	CONSULT FACTORY FOR SEAT ASSY PART NUMBERS		RING: CF8M; INSERT: PEEK; SEAL: FKM, 90 DURO SPRING: INCONEL X-750
		9	CONSULT FACTORY FOR SEAT ASSY PART NUMBERS		RING: CF8M; INSERT: PEEK; SEAL: AFLAS, 90 DURO SPRING: INCONEL X-750
60	1	HANDLE	2139937-01		DUCTILE IRON ASTM A536 GRADE 65-45-12
70	1	STEM PACKING RETAINER	J024324-008		316 SS
90	1	STEM SEAL ASSEMBLY	J024882-601		TEFLON/ELGILOY
100	1	RETAINER SNAP RING	J090066-162		PH 15-7 Mo
110	4	STUD	219066-07-02-21	219066-08-02-61	ASTM A193 B7M/ZINC PLATED
120	1	LUBE FITTING	005929-18		STEEL
130	1	VENT FITTING	2726258-01		STEEL
160	1	BONNET SEAL 1, 6	J005520-234		BUNA-N, PEROXIDE CURED, 90 DURO
		(See Note 2.) 2, 8	J005521-234		FKM, 90 DURO
		5, 7	2712425-37		HNBR, 90 DURO
		9	2788035-08		AFLAS
180	1	HANDLE SEAL	J005526-219		BUNA-N
200	4	NUT	2709000-07-11	2709000-08-11	ASTM A194 2HM/ZINC PLATED

NOTES:
1. CF8M IS ASTM A351 GRADE CF8M ANNEALED. 316 SS IS AISI TYPE 316 SS ANNEALED.
2. THESE PARTS ARE KEYED TO THE ASSEMBLY PART NUMBER "SEAT INSERT/SEAL" CODE NUMBERS INDICATED.

CAMERON

DEMCO

SERIES DT GATE VALVES
4" CLASS 600, 900 AND 1500
FOR NACE COMPLIANT SERVICE

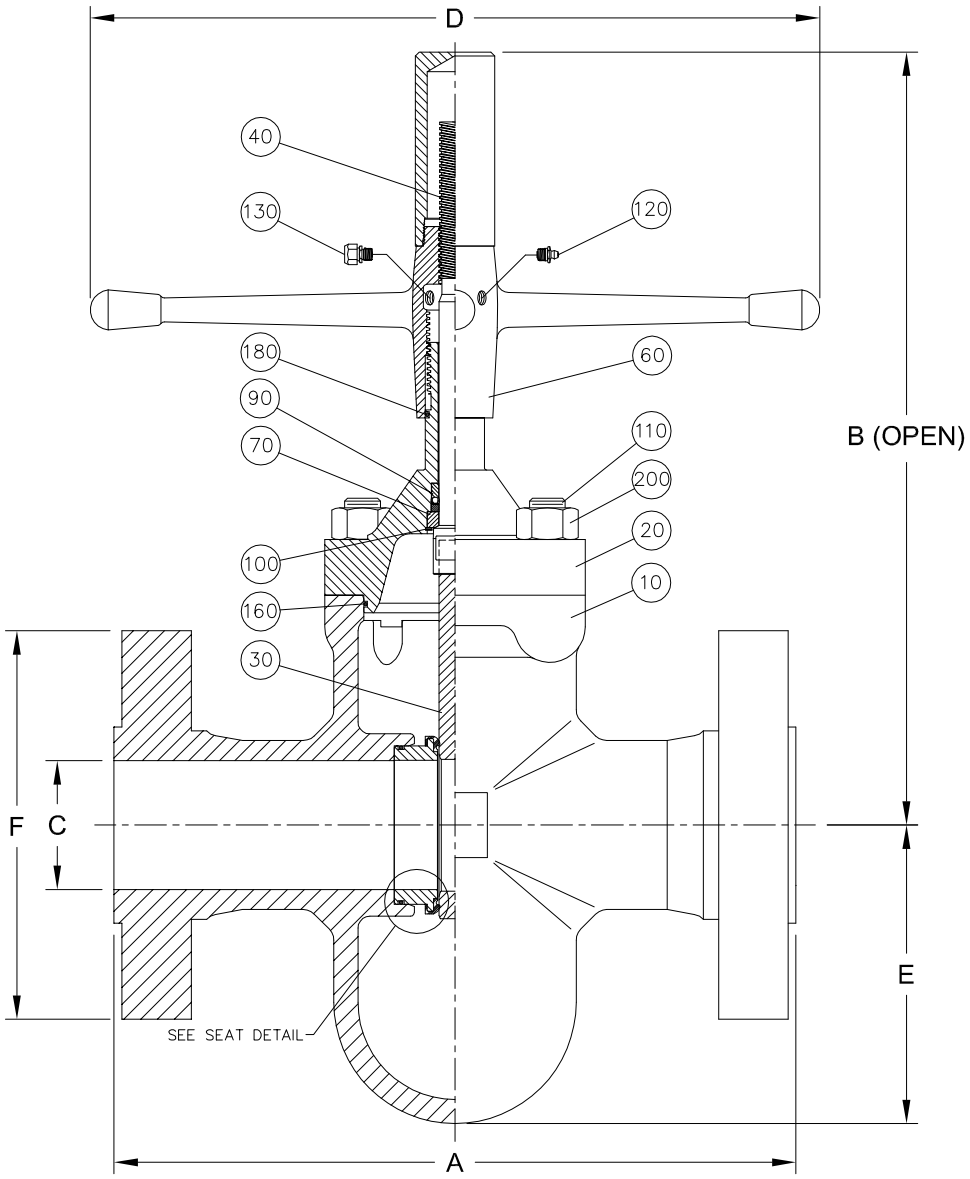

DIMENSIONAL DATA AND WEIGHTS

DIMENSION \ VALVE SIZE / CLASS	4"		
	600	900	1500
A – RF	17.00	18.00	21.50
– RTJ	17.12	18.12	21.62
B (OPEN)	24.08		24.38
C (SEAT BORE)	4.06		
D	23.00		
E	9.00	9.12	9.41
F (FLANGE DIAMETER)	10.75	11.50	12.25
FLANGE BOLTS (QTY. – SIZE)	8 – 7/8	8 – 1-1/8	8 – 1-1/4
RING NUMBER (RTJ)	R37		R39
WEIGHT (LB.) – FLANGED	170	215	295

WORKING PRESSURE (PSI)

CLASS 600	CLASS 900	CLASS 1500
1480	2220	3705

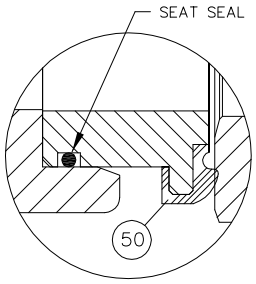

SEAT ASSEMBLY DETAIL
PC BUNA, FKM, HNBR
SEAT SEAL PART OF SEAT ASSEMBLY

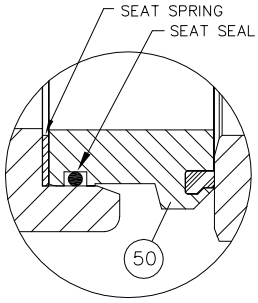

SEAT ASSEMBLY DETAIL
P-10
SEAT SPRING AND SEAL
PART OF SEAT ASSEMBLY

ASSEMBLY PART NUMBER

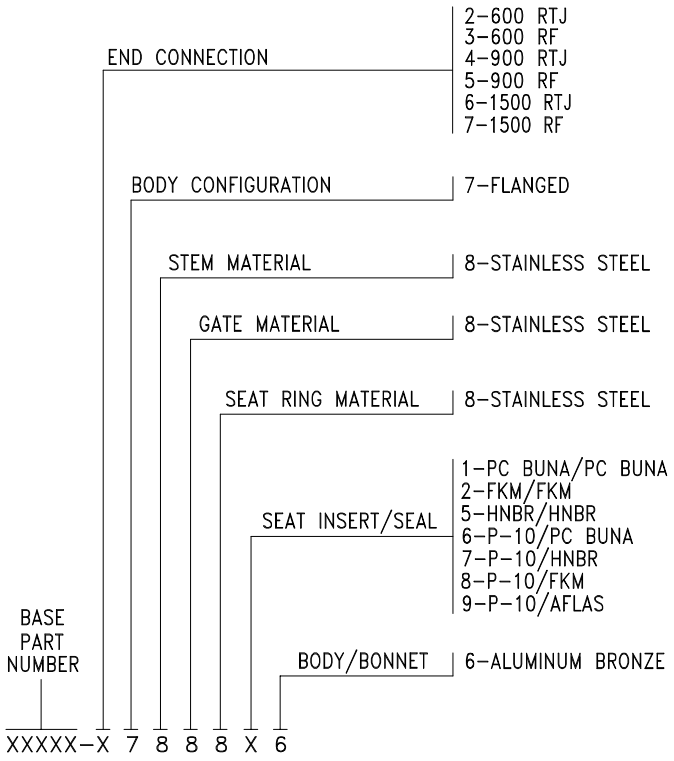

PARTS LIST

INDEX	REQD.	DESCRIPTION \ PRESSURE		600	900	1500	MATERIAL SPECIFICATION (See Note 1.)
		ASSEMBLY BASE NUMBER		J025006	J025007	J025008	
10	1	BODY – 4"		CONSULT FACTORY FOR SEAT ASSY PART NUMBERS			ALUMINUM BRONZE ASTM B148 ALLOY 955
20	1	BONNET		J024711-006	J024712-006	J024713-006	ALUMINUM BRONZE ASTM B148 ALLOY 955
30	1	GATE	1, 2, 5	J024719-008		J024721-008	STAINLESS STEEL CF8M
		(See Note 2.)	6, 7, 8, 9	J024720-008		J024722-008	
40	1	STEM		J024717-008		J024718-008	316 SS – 600 & 900 Only XM-19 1500 Only
50	2	SEAT ASSEMBLY	1	2061588-04			RING: CF8M; ELASTOMER: BUNA-N PEROXIDE CURED, 90 DURO
		(See Note 2.)	2	2061589-04			RING: CF8M; ELASTOMER: FKM, 75 DURO
			5	CONSULT FACTORY FOR SEAT ASSY PART NUMBERS			RING: CF8M; ELASTOMER: HNBR, PEROXIDE CURED, 80 DURO
			6	2061590-04			RING: CF8M; INSERT: PEEK; SEAL: BUNA-N PEROXIDE CURED, 90 DURO SPRING: INCONEL X-750
			7	CONSULT FACTORY FOR SEAT ASSY PART NUMBERS			RING: CF8M; INSERT: PEEK; SEAL: HNBR, 90 DURO SPRING: INCONEL X-750
			8	CONSULT FACTORY FOR SEAT ASSY PART NUMBERS			RING: CF8M; INSERT: PEEK; SEAL: FKM, 90 DURO SPRING: INCONEL X-750
			9	CONSULT FACTORY FOR SEAT ASSY PART NUMBERS			RING: CF8M; INSERT: PEEK; SEAL: AFLAS, 90 DURO; SPRING: INCONEL X-750
60	1	HANDLE		2139933-01			DUCTILE IRON ASTM A536 GRADE 65-45-12
70	1	STEM PACKING RETAINER		J024716-008			316 SS
90	1	STEM SEAL ASSEMBLY		J024882-604			TEFLON/ELGILOY
100	1	RETAINER SNAP RING		J090066-175			PH 15-7 Mo
110	4	STUD		219066-08-02-61	219066-09-03-21	219066-11-04-21	ASTM A193 B7M/ZINC PLATED
120	1	LUBE FITTING		005929-18			STEEL
130	1	RELIEF FITTING		2726258-01			STEEL
160	1	BONNET SEAL	1, 6	J005520-254			BUNA-N, PEROXIDE CURED, 90 DURO
		(See Note 2.)	2, 8	J005521-254			FKM, 90 DURO
			5, 7	CONSULT FACTORY FOR BONNET SEAL PART NUMBERS			HNBR, 90 DURO
			9	2788035-10			AFLAS
180	1	HANDLE SEAL		J005526-223			BUNA-N
200	4	NUT		2709000-08-11	2709000-09-11	2709000-11-11	ASTM A194 2HM/ZINC PLATED

NOTES:
1. CF8M IS ASTM A351 GRADE CF8M ANNEALED. 316 SS IS AISI TYPE 316 SS ANNEALED. XM-19 IS ASTM A479 TYPE XM-19 HOT ROLLED.
2. THESE PARTS ARE KEYED TO THE ASSEMBLY PART NUMBER "SEAT INSERT/SEAL" CODE NUMBERS INDICATED.